AD-A076 455 AIR FORCE INST OF TECH WRIGHT-PATTERSON AFB OH SCHOO--ETC F/G 5/10
ALCOHOL MISUSE AMONG USAF CIVILIAN EMPLOYEES.(U)
SEP 79 R D LARKINS

UNCLASSIFIED AFIT/GSM/SM/79S-9 NL

1 OF 3
AD
A076455

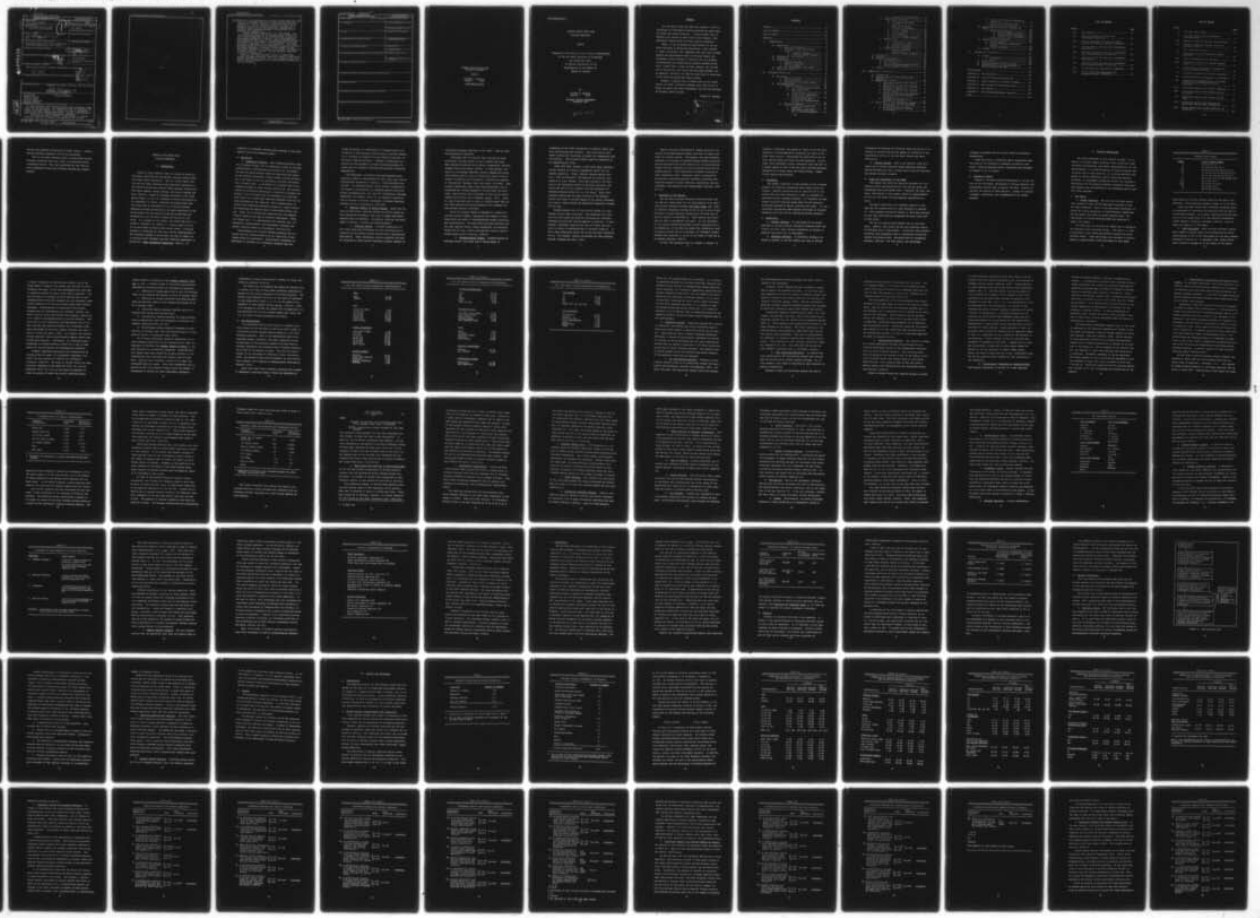

LASSIFIED

SE... A / FICATION OF THIS PAGE (When Data Entered)

REPORT DOCUMENTATION PAGE

READ INSTRUCTIONS BEFORE COMPLETING FORM

1. REPORT NUMBER: AFIT/GSM/SM/79S-9	2. GOVT ACCESSION NO.
3. RECIPIENT'S CATALOG NUMBER: Master's Thesis	
4. TITLE (and Subtitle): ALCOHOL MISUSE AMONG USAF CIVILIAN EMPLOYEES	5. TYPE OF REPORT & PERIOD COVERED: MS Thesis
	6. PERFORMING ORG. REPORT NUMBER
7. AUTHOR(s): Larkins, Richard D. Capt USAF (Larkins)	8. CONTRACT OR GRANT NUMBER(s)
9. PERFORMING ORGANIZATION NAME AND ADDRESS: Air Force Institute of Technology (AFIT) Wright-Patterson AFB, Ohio 45433	10. PROGRAM ELEMENT, PROJECT, TASK AREA & WORK UNIT NUMBERS
11. CONTROLLING OFFICE NAME AND ADDRESS	12. REPORT DATE: September 1979
	13. NUMBER OF PAGES: 192
14. MONITORING AGENCY NAME & ADDRESS (if different from Controlling Office)	15. SECURITY CLASS. (of this report): Unclassified
	15a. DECLASSIFICATION/DOWNGRADING SCHEDULE

16. DISTRIBUTION STATEMENT (of this Report)

Approved for public release; distribution unlimited

17. DISTRIBUTION STATEMENT (of the abstract entered in Block 20, if different from Report)

18. SUPPLEMENTARY NOTES: Approved for public release; IAW AFR 190-17

JOSEPH P. HIPPS, Major, USAF
Director of Information

19. KEY WORDS (Continue on reverse side if necessary and identify by block number)

Alcoholism
Alcohol Misuse
Alcohol Abuse
Alcohol Addiction
Adverse Affects
Problem Drinkers

20. ABSTRACT (Continue on reverse side if necessary and identify by block number)

This research study examined alcohol use and misuse among USAF civilian employees. Its objectives were to determine the extent of alcohol misuse and, through the use of hypothesis testing and model seeking techniques, identify characteristics which would aid in identifying alcohol misusers.

The data base was a randomly chosen sample of civilian employees weighted to reflect the population as a whole.

DD FORM 1 JAN 73 1473 EDITION OF 1 NOV 65 IS OBSOLETE

UNCLASSIFIED

SECURITY CLASSIFICATION OF THIS PAGE (When Data Entered)

AD A076455

FILE COPY

DDC RECEIVED NOV 14 1979 E

20. Central to the examination of alcohol misuse were the creation and systematic analysis of three problem drinking categories: alcohol addiction, defined as physical dependence on alcohol; adverse affects of alcohol, evidenced by serious social and behavioral consequences of drinking; and, problem drinking, a combination of the previous two categories.

Alcohol addicts comprised 1.1% of the sample. Alcohol addiction proved to be the most severe form of alcohol misuse examined and was characterized by high psychological dependence on alcohol, low job satisfaction and distrust of Air Force policy toward treatment and rehabilitation of alcoholics. Persons adversely affected by alcohol comprised 5.9% of the population. They were generally young and male and members of a racial minority. They also displayed a moderate to high degree of psychological dependence on alcohol and probably had parents who drank heavily. Overall, problem drinkers comprised 7.0% of the population.

Many of the same variables useful in describing problem drinking categories were also useful in predicting alcohol consumption levels. This fact supported the view that alcohol consumption levels and drinking problems are closely related.

SECURITY CLASSIFICATION OF THIS PAGE (When Data Entered)

REPORT DOCUMENTATION PAGE

READ INSTRUCTIONS BEFORE COMPLETING FORM

1. REPORT NUMBER	2. GOVT ACCESSION NO. / 3. RECIPIENT'S CATALOG NUMBER
4. TITLE *(and Subtitle)*	5. TYPE OF REPORT & PERIOD COVERED
	6. PERFORMING ORG. REPORT NUMBER
7. AUTHOR*(s)*	8. CONTRACT OR GRANT NUMBER*(s)*
9. PERFORMING ORGANIZATION NAME AND ADDRESS	10. PROGRAM ELEMENT, PROJECT, TASK AREA & WORK UNIT NUMBERS
11. CONTROLLING OFFICE NAME AND ADDRESS	12. REPORT DATE
	13. NUMBER OF PAGES
14. MONITORING AGENCY NAME & ADDRESS*(if different from Controlling Office)*	15. SECURITY CLASS. *(of this report)*
	15a. DECLASSIFICATION/DOWNGRADING SCHEDULE
16. DISTRIBUTION STATEMENT *(of this Report)*	
17. DISTRIBUTION STATEMENT *(of the abstract entered in Block 20, if different from Report)*	
18. SUPPLEMENTARY NOTES	
19. KEY WORDS *(Continue on reverse side if necessary and identify by block number)*	
20. ABSTRACT *(Continue on reverse side if necessary and identify by block number)*	

DD FORM 1 JAN 73 1473 EDITION OF 1 NOV 65 IS OBSOLETE

SECURITY CLASSIFICATION OF THIS PAGE *(When Data Entered)*

ALCOHOL MISUSE AMONG USAF CIVILIAN EMPLOYEES

THESIS

Richard D. Larkins
Captain USAF

AFIT/GSM/SM/79S-9

AFIT/GSM/SM/79S-9

ALCOHOL MISUSE AMONG USAF CIVILIAN EMPLOYEES

THESIS

Presented to the Faculty of the School of Engineering
of the Air Force Institute of Technology
Air University (ATC)
in Partial Fulfillment of the
Requirements for the Degree of
Master of Science

by

Richard D. Larkins
Captain USAF

Graduate Systems Management
September 1979

ADA 012 225

Preface

As I am sure is the case with most authors, I find it impossible to individually mention everyone who had a hand in making this effort possible. I would however like to mention a few people by name without whose support, this particular thesis would have never reached completion.

First, I wish to express my appreciation to two Air Force Institute of Technology professors: Capt. Michael J. Stahl, my advisor, who suggested this topic and provided support and encouragement when it was most needed; and Lieutenant Colonel Charles W. McNichols for his patience in deciphering and correcting my computer program errors. Next, I would like to thank my wife, Leadell, who decided not to divorce me, even though she had ample grounds, and my daughter, Christine, who had the good sense to sleep most of the time this thesis was being written.

Finally, a special note of thanks goes to the Brooks family; to Terry, the master drafter, and, most of all to Susan, my typist and chief interpreter, who has the patience of Job and a heart of gold.

Richard D. Larkins

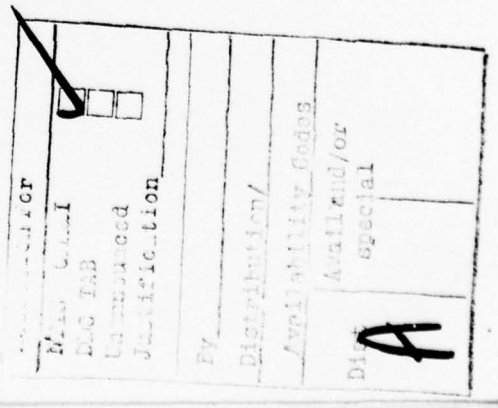

Contents

Preface ii

List of Figures vi

List of Tables vii

Abstract ix

I. Introduction 1

A. Background 2
1. Diagnostic Criteria 2
2. Previous Studies of Alcohol Misuse 3
a. Clinical Studies 3
b. Epidemiological Studies ... 4
B. Statement of the Problem 6
C. Objectives 7
D. Definitions 7
1. Alcohol Addicted 7
2. Adversely Affected 7
3. Problem Drinker 8
E. Scope and Limitations of the Study 8
F. Outline of Thesis 9

II. Research Methodology 10

A. The Sample 10
1. Sample Selection 10
2. Data Collection 11
3. Screening and Weighting Cases 12
B. The Questionnaire 16
1. Composite Measures 20
a. Job Satisfaction(JOB SAT).. 20
b. Work Involvement (WKINVOLV) 21
c. Stress/Tension(STRESS) 22
d. Psychological Dependence on Alcohol(PSYDEP) 23
e. Organizational Trust (TRUST) and Program Worth (WORTH) 25
2. Frequency Measures 26
a. Volume of Alcohol Consumed(VT) 26
b. Days Missed from Work Due to Drinking(DAYSOFF) .. 31

c. Intoxication Index(INTOX) .. 32
3. Drinking Problem Areas 33
a. Binge Drinking 33
b. Symptomatic Drinking Behavior 33
c. Heavy Drinking or Frequent Intoxication 34
d. Loss of Control 34
e. Spouse Problems 34
f. Job Problems 34
g. Police Problems 35
h. Health or Injury Problems .. 35
4. Demographics 35
a. Salary 35
b. Socioeconomic Status 37
c. Geographic Region 37
d. Parental Variables 37
5. Problem Drinker Criteria 39
a. Alcohol Addiction Criteria 39
b. Adverse Affects Criteria ... 43
C. Reliability 47
D. Validity 49
E. Research Methodology 52
1. Hypothesis Tests 52
2. Uses of AID 55
3. Regression/Discriminant Analysis .. 57
4. Problem Drinker Profiles 57
F. Summary 58

III. Results and Discussion 59

A. Introduction 59
B. Problem Drinker Categorization and Examination 59
C. Hypothesis Testing 68
1. Hypotheses Dealing with Alcohol Addiction 70
2. Hypotheses Dealing with Adverse Affects of Alcohol 76
3. Hypotheses Dealing with General Alcohol Usage 80
4. Hypotheses Dealing with Subjects Not Associated with Alcohol Consumption 89
5. Hypotheses Test Results as Evidence of Validity 89
D. Use of AID to Find Homogeneous Groups 92
1. Groups with Alcohol Addiction as Criterion 95
2. Groups with Adverse Affects as Criterion 98

3. Groups with Problem Drinking as Criterion 98
4. Groups with Alcoholic Consumption(VT) as Criterion 101
E. Regression/Discriminant Analysis of Data 106
1. Discriminant Analysis 107
a. Alcohol Addict Analysis ... 108
b. Adverse Affects Analysis .. 111
c. Problem Drinker Analysis .. 113
2. Regression Analysis 115
F. Problem Drinking Profiles 117
1. Alcohol Addicts 117
2. Persons Adversely Affected by Alcohol 118
3. Problem Drinkers 118
G. Summary 118

IV. Summary and Conclusions 120

A. Summary 120
1. Methodology 120
2. Results 121
B. Conclusions 122
C. Benefits Derived from This Study 126
D. Recommendations for Improvements in Future Research Efforts 127

Bibliography 129

Appendix A: The Instrument 132

Appendix B: Composite Measures Formulation 154

Appendix C: Factor Analysis of Problem Drinkers 158

Appendix D: Mean Values for Hypothesis Tests 161

Appendix E: AID Analysis 164

Appendix F: Discriminant/Regression Analysis 183

Vita 192

List of Figures

Figure		Page
2-1	Data Analysis Flow	53
E-1	Alcohol Addiction AID Tree with Demographic Predictors	165
E-2	Alcohol Addiction AID Tree with Demographic and Composite Measure Predictors ..	166
E-3	Adverse Affects AID Tree with Demographic Predictors	167
E-4	Adverse Affects AID Tree with Demographic and Composite Measure Predictors	168
E-5	Problem Drinker AID Tree with Demographic Predictors	169
E-6	Problem Drinker AID Tree with Demographic and Composite Measure Predictors	170
E-7	VT AID Tree with Demographic Predictors ...	171
E-8	VT AID Tree with Demographic and Composite Measure Predictors	172

List of Tables

Table		Page
I	Civilian Grade Groups	11
II	U.S. Air Force Civilian Population Characteristics	17
III	Frequency Codes for Typical Drinking Days ..	28
IV	Frequency Codes for Atypical High Consumption Days(D)	30
V	Dry Geographic Regions	38
VI	Indicators of and Criteria for Alcohol Addiction	42
VII	Serious Consequences of Drinking	45
VIII	Correlation Analysis of Similar Response Pairs	49
IX	Self-Report and Supervisor Estimates of Alcohol Related Problems	51
X	Reported Indications of Alcohol Addiction ..	60
XI	Reported Serious Consequences of Drinking ..	61
XII	Comparison of Characteristics of Problem Drinking and Non-Problem Drinking Categories	63
XIII	Hypotheses Dealing with Alcohol Addiction ..	71
XIV	Hypotheses Dealing with Adverse Affects of Alcohol	77
XV	Hypotheses Dealing with General Alcohol Usage	81
XVI	Hypotheses Dealing with Subjects Not Associated with Alcohol Consumption	90
XVII	Groups Formed with Alcohol Addiction as Criterion	96

Table		Page
XVIII	Groups with Adverse Affects of Alcohol as Criterion	99
XIX	Groups with Problem Drinking as Criterion	102
XX	Groups with Alcohol Consumption Level(VT) as Criterion	104
XXI	Discriminant Analysis with Alcohol Addiction as Criterion	109
XXII	Discriminant Analysis with Adverse Affects as Criterion	112
XXIII	Discriminant Analysis with Problem Drinkers as Criterion	114
XXIV	Regression Analysis with VT as Criterion	116
XXV	Formulas for Computing Composite Measure Scores	155
XXVI	Factor Loadings of Items Comprising Composite Measures	156
XXVII	Factor Loadings of Alcohol Addiction	159
XXVIII	Factor Analysis of Adverse Affects Items	160
XXIX	Group Means for Hypothesis Tests in Which More Than Two Groups Are Examined	162
XXX	Variables Used as Predictors in AID Analysis Along with Coded Values	173
XXXI	Scaling Composite Measures	181
XXXII	Independent Variables Used in Discriminant Analysis of Alcohol Addiction	184
XXXIII	Independent Variables Used in Discriminant Analysis of Adverse Affects	186
XXXIV	Independent Variables Used in Discriminant Analysis of Problem Drinkers	188
XXXV	Independent Variables Used in Regression Analysis of VT	190

Abstract

This research study examined alcohol use and misuse among USAF civilian employees. Its objectives were to determine the extent of alcohol misuse and, through the use of hypothesis testing and model seeking techniques, identify characteristics which would aid in identifying alcohol misusers.

The data base was a randomly chosen sample of civilian employees weighted to reflect the population as a whole. Central to the examination of alcohol misuse were the creation and systematic analysis of three problem drinking categories: alcohol addiction, defined as physical dependence on alcohol; adverse affects of alcohol, evidenced by serious social and behavioral consequences of drinking; and, problem drinking, a combination of the previous two categories.

Alcohol addicts comprised 1.1% of the sample. Alcohol addiction proved to be the most severe form of alcohol misuse examined and was characterized by high psychological dependence on alcohol, low job satisfaction and distrust of Air Force policy toward treatment and rehabilitation of alcoholics. Persons adversely affected by alcohol comprised 5.9% of the population. They were generally young and male and members of a racial minority. They also displayed a moderate to high degree of psychological dependence on

alcohol and probably had parents who drank heavily. Overall, problem drinkers comprised 7.0% of the population.

Many of the same variables useful in describing problem drinking categories were also useful in predicting alcohol consumption levels. This fact supported the view that alcohol consumption levels and drinking problems are closely related.

ALCOHOL MISUSE AMONG USAF CIVILIAN EMPLOYEES

I. Introduction

There is little question that the misuse of alcoholic beverages constitutes an increasingly serious problem among the United States population. The U.S. Public Health Service and the Crime Commission have described alcoholism as the Nation's fourth most serious health problem, ranking behind heart disease, mental illness, and cancer (Cahalan and Room, 1974:xi). Among the findings contained in the Third Special Report to the U.S. Congress on Alcohol and Health by the Department of Health, Education and Welfare(HEW) were that there were an estimated 9.3 to 10 million problem drinkers-including alcoholics-in the adult population of the United States and that alcohol abuse and alcoholism were estimated to cost the Nation nearly $43 billion in 1975 alone. In a forward to the report, the former HEW Secretary Joseph A. Califano, Jr. states, "...there is much we still do not know about alcoholism and alcohol abuse. Continued research is essential not only for a better understanding of the processes leading to alcoholism, but also to enable us to provide better treatment and more effective approaches to prevention" (NIAA Information Newsletter, 1978:1). An

expansion of knowledge covering these concepts is the major impetus behind this research effort.

A. Background

1. Diagnostic Criteria. When reviewing previous studies of alcohol misuse, one is immediately struck by the wide proliferation of definitions and doctrines on the subject. Not only are there various terms for describing the nature of the problem (alcoholism, alcohol abuse, problem drinking, etc.) but there is also no universally accepted interpretation of these terms. In an effort to eliminate some of the confusion wrought by these various definitions, the National Council on Alcoholism established a committee to prepare and publish a set of criteria for the diagnosis of alcoholism. While there is no where near unanimous agreement with the results published by the committee, their categorization of criteria for alcoholism diagnosis serves as a useful vehicle for describing the various means of describing alcohol misuse. First, the criteria were assembled into two separate "tracks" based on the type of material represented. These two tracks were: (1) physiological and clinical; and, (2) behavioral, psychological, and attitudinal (Criteria Committee, National Council on Alcoholism, 1972:128-131).

Physiological and clinical criteria generally are concerned with the physical effects on the human body of prolonged alcoholic consumption. Physiological dependency is manifested by evidence of a withdrawal syndrome when the

intake of alcohol is interrupted or decreased without substitution of other sedation (gross tremor, delirium tremors, etc.), evidence of tolerance to the effects of alcohol, or alcoholic "blackout periods." Clinical criteria are concerned with the existence of major alcohol-associated illnesses such as alcoholic hepatitis and alcoholic cerebellar degeneration.

The behavioral, attitudinal and psychological track comprise a number of manifestations which imply some form of psychological dependence on alcohol. These manifestations include: (1) drinking despite strong medical contraindication known to the patient; (2) drinking despite identified social contraindication (job loss for intoxication, marriage disruption, DWI arrest, etc.); or (3) patient's subjective loss of control of alcohol consumption (Criteria Committee, National Council on Alcoholism, 1972:129).

2. Previous Studies of Alcohol Misuse. Aside from the issue of definition, previous studies on alcohol misuse are also classified according to the type of sample from which research data are gathered. In general, there are two major types of studies: clinical and epidemiological.

a. Clinical Studies. Clinical researchers collect their data from individuals who are receiving help or treatment for an alcohol related problem from a professional organization. These individuals could be patients from mental hospitals or local alcohol treatment centers, members of

Alcoholics Anonymous chapters, or all three. Data are usually gathered by interview.

Clinicians tend to classify their subjects as being alcoholics, but they differ on how to define that term. Many consider alcoholism as a chronic, progressive, physical disease (Polich and Orvis, 1978:6). In this context, evidence of a withdrawal syndrome, physical damage from excessive drinking and/or a loss of behavioral control over alcoholic consumption are considered to indicate the essence of "alcoholism" (Wanberg, Horn, and Foster, 1977:523). Some clinical researchers take a more multidimensional view of alcoholism and include diagnostic criteria from the behavioral, psychological and attitudinal as well as the physiological and clinical track (Wanberg, et al., 1977). Finally, some clinicians seem to have no criteria other than the fact that subjects are institutionalized for treatment of some problem related to alcohol.

There is a certain degree of agreement in results of clinical alcohol studies, especially with respect to variables which are useful in discriminating between alcoholics and non-alcoholics. The most often mentioned variables are sex, age, marital status, ethnic background, socioeconomic status and job type, anxiety and personal control, and attitude toward alcohol (McCully, 1978:10).

b. Epidemiological Studies. Epidemiological researchers gather their data from a random sample of

households of the target population of interest rather than from institutionalized patients. They rely both on self-report surveys and interviews to obtain the information used for analysis. This research effort would be classified as an epidemiological study.

There have been, perhaps, a half dozen major epidemiological studies of alcoholic consumption within the U.S. general population. Three, however, deserve special mention. They are Mulford's 1964 analysis of alcoholic consumption in Iowa, Cahalan, Cisin and Crossley's 1970 analysis of two nationwide surveys of drinking practices, and Polich and Orvis's 1977 research into the prevalence of drinking problems within the U.S. Air Force. These three research efforts are the basis for much of the material within this study to include design of the survey instrument. As a result, these authors are referenced frequently throughout the text.

Epidemiologists tend to view alcohol misuse in a much broader context than clinicians. They generally use criteria from both tracks and describe alcoholism as a multidimensional process with varying degrees of severity. In this respect, withdrawal symptoms and loss of control are only two of a series of manifestations of alcoholic behavior. In fact, some researchers prefer not to use the term "alcoholic" at all. For example, Cahalan substitutes the term "problem drinker" (Cahalan and Room, 1974).

Despite the major differences in sample selection, the results of epidemiological studies have much in common with those of clinical studies. For example, the same variables reported by clinicians as differentiating between alcoholics and non-alcoholics were also found useful in discriminating between various categories of alcohol misusers described by epidemiologists. Other significant variables uncovered by these researchers were: geographic region, urbanization, and several social-psychological variables including environmental support for heavy drinking, impulsivity, and nonconformity, and aberration and maladjustment (McCully, 1978: 40, 47).

B. Statement of the Problem

The Air Force Civilian Personnel Directorate(DPC) has set 1980 as a target date for the establishment of an effective alcohol treatment program (Air Force Times, Feb. 1978). An effective program as defined by DPC is one in which every Air Force civilian employee needing help with some type of alcohol problem is receiving it. Three actions were necessary in order to accomplish this goal: (1) The prevalence of the alcohol problem among USAF civilian employees had to be determined; (2) An effective method for identifying those who misuse alcohol had to be devised; (3) Treatment centers staffed with qualified personnel to aid those in need had to be created (McCully, 1978:6).

In 1977, DPC requested that Lt. Colonel R. Manley, Lt.

Colonel C. McNichols, and Captain M. Stahl of the Air Force Institute of Technology(AFIT) accomplish the first of the above three actions: determining the magnitude of the alcohol problem among Air Force civilian employees. Accordingly, they developed a survey instrument which was sent to a random sample of some 17,000 Air Force civilian employees stationed at 50 bases across the United States. Almost 10,000 replies were received.

C. Objectives

The overall objective of this research is the in-depth analysis of alcoholic consumption among USAF civilian employees. Specific objectives are in line with two of the actions DPC feels are necessary in order to implement an effective alcohol treatment program: (1) Determine the magnitude of alcohol problems among USAF civilian employees using data gathered by Manley, McNichols and Stahl. (2) Use hypothesis testing and model seeking techniques to identify variables which will aid in identifying alcohol misusers.

D. Definitions

1. Alcohol Addicted. An individual who is alcohol addicted is one who exhibits observable behaviors which are chronic and which imply physical dependence on alcohol or physical impairment akin to dependence.

2. Adversely Affected. An individual adversely affected by alcohol is one who suffers any type of serious

consequence of drinking not reflected under alcoholism if it results in concrete and serious damage or disruption to the individual's life or to the Air Force (Polich and Orvis, 1978:12-13).

3. Problem Drinker. This is the author's term for a person who is alcohol addicted and/or adversely affected. Problem drinkers are those persons most in need of help from any alcohol treatment program.

E. Scope and Limitations of the Study

The sample from which the data were gathered for this research effort was stratified by civil service grade and randomized within each grade level. Therefore the data, and hence, the results of this study, should be representative of the U.S. Air Force civilian employee population as a whole.

One major restriction on a research project of this type was the limited amount of time available to complete it. This restraint forced the author to limit data analysis to only that which directly supported the major objectives of this study.

The use of a mailed questionnaire has its own drawbacks. However, this method was the only practical method of surveying such a large sample. In addition some research indicates that respondents tend to underreport actions/incidents involving alcohol, including rates of consumption (McCully, 1978:26). For this reason, any percentage

estimates concluded from this study should be considered conservative.

There are certain limitations and/or assumptions made with some of the variables or measures involved in this study. These assumptions and/or limitations are discussed in Chapter II of the thesis.

F. Outline of Thesis

Chapter II concerns research methodology to include design of the instrument, development of various measures, and psychometric methods used to analyze the data. Chapter III contains the results of data analysis. Chapter IV contains a summary, conclusions, and recommendations for future research.

II. Research Methodology

The topics discussed in this chapter include: (1) the sample, to include sample selection, data collection, reply screening and weighting, and sample characteristics; (2) the questionnaire, to include derivation of various measures and variables used in data analysis; (3) criteria defining categories of alcohol addiction, adverse affect and problem drinking; (4) instrument reliability checks; (5) validation techniques; and (6) research methods, including a data analysis sequence and descriptions of the techniques used to perform these analyses.

A. The Sample

1. Sample Selection. The Air Force civilian population consists of some 230,000 employees stationed at over 200 bases worldwide. Since it was practically impossible to survey the entire population, a representative, random sample was needed from which to gather research data. The Directorate of Civilian Personnel(DPC) was requested to supply this sample.

The first step in selecting the sample was to categorize the population into ten grade groups. (See Table I.) Then, a percentage of each group was randomly selected by social security number. These percentages were designed to yield a sample of approximately 2,000 individuals in each grade

TABLE I

Civilian Grade Groups

GROUP	CIVIL SERVICE GRADES
I	WG 1-4; GS 1-3
II	WG 5-8; WL 1-3; GS 4
III	WG 9-10; WS 1-3; WL 4-6; GS 5
IV	WG 11-12; WS 4-6; WL 7-10; GS 6
V	WG 13; WS 7-8; WL 11-13; GS 7
VI	WG 14-15; WS 9-10; WL 14-15; GS 8
VII	WS 11-12; GS 9
VIII	WS 13-14; GS 10-11
IX	WS 15-16; GS 12
X	WS 17-19; GS 13-15

group based on civilian manning levels at the time of the selection. This procedure yielded a sample of 21,203 names.

There was some concern that individual anonymity might be compromised if relatively few personnel from any one location were surveyed. As a result, questionnaires were sent only to those bases where 80 or more selected respondents worked (Manley, McNichols, and Stahl, 1979:12). This reduced the sample to 17,758 names.

2. Data Collection. Local Civilian Personnel Offices were chosen as logical points for distributing the survey questionnaire to the 17,758 individuals who had been randomly selected to receive it. In September 1978, these offices were notified by message as to the nature of the survey

and solicited their fullest cooperation in its administration.

The questionnaires were mailed to each office in October 1978 along with a package of administrative instructions (Appendix A). Included in this package was a response rate work sheet. This sheet was designed to provide detailed information on the distribution of the questionnaire.

From the 17,758 names in the sample, 9939 useable responses were received for a response rate of 55.97%. However, from data supplied on the response rate work sheets, it was determined that, for various reasons, only 13,146 individuals actually received a questionnaire. Therefore, the actual response rate was 75.6%, considered good for a self-report survey. Of the completed questionnaires returned to researchers, 69% were group administered and 31% sent to respondents through the mail (Manley, et al., 1979:12).

3. Screening and Weighting Cases. Potentially, measurements of all human traits are affected by many contingent variables, such as time limits, guessing, response styles, fatigue, etc. The variables represent potential problems for obtaining quality data in that they can (1) reduce reliability, (2) introduce reliable sources of individual differences that lower overall validity, or (3) produce substantial correlations between tests or differences among means of experimental groups which actually are spurious (Nunnally, 1978:627).

While there are numerous contingent variables that potentially influence measures of psychological traits, two are believed to have a certain degree of effect on the data gathered during this survey:

(1) Social Desirability. Much of the variance on all self-inventory measures of personality can be explained by a factor concerning the tendency to say good rather than bad things about oneself. This factor is referred to as social desirability or expressed self-desirability (Nunnally, 1978: 661). Its effect is usually greatest when the trait being measured is generally thought to be socially undesirable (such as alcoholism). There is evidence that respondents tend to underestimate their association with alcoholic beverages (Plant, Krietman, Miller, and Duffy, 1977).

(2) Carelessness and Confusion. Carelessness and confusion by the respondent can relate to the purpose of the test, the test instructions, the item content, or other aspects of the test situation. Regardless of its form or the motivations of the individual who is careless or confused, the effects are the same-a source of randomness in the test situation. Some research already indicates that clerical error on the part of respondents accounts for a large portion of the deviant responses made on psychological tests or surveys (Randell and Campbell, 1973).

The problem of underestimating association with alcohol brought about by either or both of these contingent variables

is almost impossible to identify and correct, due to the large number of cases in the survey, and the fact it is anticipated that many, if not most respondents will have zero or negative responses to many of the survey questions. The only recourse is to repeat the fact that any and all percentages derived from this research must be considered lower bound estimates of the alcohol problem among USAF civilian employees. Overestimation of association with alcohol brought about by carelessness and confusion, however, can have a serious effect upon further data analysis, especially if it leads to overcategorization of problem drinkers. Previous work by Rand Corporation and preliminary runs of the data indicate that problem drinkers will constitute a very small percentage of the total sample, probably less than 10 percent (Polich and Orvis, 1978). As a result, any miscategorized personnel have a proportionally greater effect upon further data analysis. Fortunately, the relatively small percentage of problem drinkers allowed for a case by case search for and elimination of miscategorized personnel.

Evidence regarding carelessness and confusion can be obtained from the number of incompatible responses, e.g., rating the same concept as "useful" and "worthless" (Nunnally, 1978:676). The areas of concern within the questionnaire (Appendix A) are Questions 67-81, 99, 100 and Questions 87-96, for it is on the basis of responses to these two groups of items that alcohol addiction and/or

adverse affects is determined (See Problem Drinking Criteria, p. 39). A careful review of the entire questionnaire revealed the following checks for incompatible responses:

1. Admission of having spent time in jail for drinking (Q75) in one instance and failure to do so in another (Q82).

2. Reporting an illness connected with drinking which kept one from work (Q67) in one instance and failure to do so in another (Q64).

3. Indicating marital problems (Q78-81) and yet reporting never having been married (Q10).

4. Inconsistency between frequency of binge drinking (Q71) or drunkenness (Q87) and frequency of alcoholic consumption (Q38 and/or Q47, 48, 49).

5. Inconsistency between reported illnesses or injuries due to drinking (Q67, Q76) and reported stays in a hospital or visits to a physician (Q99, Q100).

All of those individuals initially categorized as alcohol addicted along with all who reported six or more consequences of drinking (See Adverse Affects Criteria, p. 43) were examined for incompatible responses. Conservatively, only those cases which showed two or more instances of incompatibility were considered for removal from the data base. Based on these criteria, a total of 38 cases were eliminated from the sample. While this represented only .3 percent of the total number of cases within the sample, it represented 12 percent of those individuals originally

classified as alcohol addicted and 5 percent of those classified as adversely affected.

The final step in preparing the sample for analysis was to weight it so that it would more accurately represent responses of the entire population of civilian employees. The weights used represent the ratio of the number of employees in each grade group (Table I, p. 11) to the number of respondents in those groups (Manley, et al., 1979:13). Table II is designed to provide the reader with an appreciation of the characteristics of the weighted sample and, hence, the U.S. Air Force civilian population as a whole.

B. The Questionnaire

The instrument used in this study is a somewhat modified version of the one used by Polich and Orvis (1978) to investigate alcohol related problems among U.S. Air Force military personnel. Most of the modification done by researchers Manley, McNichols, and Stahl consisted of redirecting many of the questions toward a civilian versus a military population and including three criterion variables to be used in the analysis of data. They are the Hoppock measure of job satisfaction (McNichols, Stahl, and Manley, 1978), the Patchen (1965) work involvement (or work motivation) measure, and a measure of stress/tension developed by Farquhar (1977).

Aside from these three criterion variables and a number of demographic questions (many of which are described in

TABLE II

U.S. Air Force Civilian Population Characteristics

SEX:	
Male	63.9%
Female	35.3%
AGE:	
20 yrs or less	1.4%
21-24 yrs	4.4%
25-30 yrs	13.2%
31-39 yrs	20.6%
40-48 yrs	25.0%
49-60 yrs	33.8%
over 60 yrs	4.5%
YEARS OF SERVICE:	
less than 1 year	2.5%
1-5 yrs	15.9%
6-10 yrs	15.1%
11-15 yrs	19.0%
16-20 yrs	15.4%
21-25 yrs	10.9%
26-30 yrs	13.7%
over 30 yrs	7.7%
MARITAL STATUS:	
Married	79.0%
Never Been Married	8.1%
Divorced	9.4%
Legally Separated	1.0%
Widowed	2.3%

TABLE II (cont.)

U.S. Air Force Civilian Population Characteristics

NUMBER OF DEPENDENTS:	
None	24.8%
One	22.3%
Two	18.8%
Three	17.9%
Four	9.3%
Five or More	6.7%
EDUCATION LEVEL:	
Non High School Grad	7.8%
High School Grad	41.0%
Some College	36.7%
College Degree	6.6%
Post Graduate Work	8.0%
RACE:	
Black	9.0%
Hispanic	9.6%
American Indian	2.3%
Oriental	3.0%
White/Other	75.8%
ALCOHOL CONSUMPTION:	
Drinker	90.7%
Non Drinker	9.2%
SUPERVISORY STATUS:	
Supervisor	15.7%
Non Supervisor	84.3%

TABLE II (cont.)

U.S. Air Force Civilian Population Characteristics

PAY SYSTEM:	
GS	62.2%
WS	4.1%
WL	1.4%
WG	32.2%
Other (UA, NA, AS, PS)	.1%
WORK FUNCTION:	
Maintenance	27.2%
Supply	10.1%
Logistics Mgt	7.3%
Civil Engineering	7.1%
Admin	5.3%
Comptroller	5.7%
Other	37.2%

Table II), the questionnaire also contained: (1) a battery of questions designed to calculate individual alcoholic consumption levels and one to calculate days missed from work due to drinking; (2) a series of experiences associated with alcohol consumption from which come the criteria for determining alcohol addiction and adverse affects; (3) a series of questions concerning Air Force policy toward alcoholism and Air Force treatment programs; (4) a battery of items concerning reasons why people drink; and, (5) a series of questions to be filled out only by supervisors which are designed as validity checks on certain other responses made to the questionnaire.

1. Composite Measures. Composite measures are a series of behavioral, attitudinal and social constructs, many of which have proved useful in describing alcohol use and misuse. Aside from the three criterion variables previously mentioned, a measure of psychological dependence on alcohol is included in the questionnaire and two other measures are derived from the series of questions on Air Force alcoholism policy and Air Force treatment programs. The formulas used to derive measure scores are obtained from factor analysis of the questions comprising the measures.

a. Job Satisfaction(JOB SAT). Previous clinical research reports little or no correlation between job satisfaction and alcoholism (Schuckit and Gunderson, 1974). Despite this fact, this particular concept still held promise

as a discriminator of problem drinkers and hence, was included in the instrument.

Hoppock's (1935) measure was used to obtain a respondent's overall job satisfaction level. It is a four question (Questions 15-18 in the survey instrument) measure validated in research with samples from both the military and industry (McNichols, et al., 1978). The job satisfaction score was obtained using the validated formula (See Appendix B, Table XXV) yielding a scale score between four and 28.

A principal component factor analysis (PA1) (Nie, Hull, Jenkins, Steinbrenner, and Bent, 1975) of the four Hoppock questions yielded only one factor with an eigenvalue greater than 1.0. This component also explained 64.0 percent of the total variance in the sample. The factor loadings on the retained factor (See Appendix B, Table XXVI) are high and have nearly equal magnitudes. This fact is justification for weighting the questions equally when computing measure scores. Using Cronbach's (1951) formula, coefficient alpha was computed to be .801. This indicates the measure has good internal consistency and is, therefore, reliable.

b. Work Involvement(WKINVOLV). No studies were found investigating the relationship between work involvement and alcoholism or alcohol related problems. So, in this instance, this study is exploring an area untouched by previous researchers.

Patchen's (1965) job motivation measure was used to

describe the respondent's involvement with his work. Like the Hoppock measure, it consists of four questions (Questions 19-22) and the formulas for computing scores are similar in form (See Appendix B, Table XXV). Patchen job motivation scores can vary from four to 20.

The four questions in the Patchen measure were factor analyzed in the same manner as those in the Hoppock measure. Again, only one factor with an eigenvalue greater than 1.0 was obtained, and it accounted for 44.2 percent of the variance in the responses. Factor loadings for the retained factor (See Appendix B, Table XXVI) are again nearly equal in magnitude, justifying equal weighting of the questions when calculating scores. Coefficient alpha for the measure was computed to be .559, lower than that computed for the Job Satisfaction measure, but still of sufficient magnitude to judge the measure reliable.

c. Stress/Tension(STRESS). High tension or stress is a common descriptive variable of alcoholism and most clinical researchers include it as a predominant characteristic of their alcoholic subjects. They generally agree that the alcoholic has learned to rely on the effects of alcohol to reduce tension and build a sense of self-esteem. After drinking, their subjects tend to feel and exhibit greater control over themselves and the environment around them (McCully, 1978:13).

Stress or tension levels are examined through a battery

of eight questions (Questions 23-30) taken from a test for gauging stress and tension developed by Dr. John Farquhar of Stanford Medical School (Farquhar, 1977). Factor analysis of these questions resulted in two factors with eigenvalues greater than 1.0. The first factor with an eigenvalue of 3.26 explained 40.8 percent of the variance in the eight questions and had high factor loadings on Questions 23-28 (ranging in value from .58 to .78). The second factor, with an eigenvalue of 1.06 accounted for 13.3 percent of the variance and had high factor loadings on Questions 29 and 30 (.53 and .79 respectively). Different response sets for Questions 29 and 30 rather than different underlying concepts are believed to be the reason for the second factor. Irregardless, it was decided to use only Questions 23-28 in defining the stress measure. Factor analysis of these six questions alone yielded one factor with an eigenvalue greater than 1.0, accounting for 51.1 percent of the variance in the responses. Factor loadings of the six questions are contained in Appendix B, Table XXVI. Loadings are all high and close enough in magnitude to allow simply adding responses to the six questions to obtain stress scores. Scores can range in value from six to 30. Coefficient alpha for the six question stress measure is .794, attesting to its reliability.

d. Psychological Dependence on Alcohol(PSYDEP). Psychological dependence on alcohol is a very important

concept in alcohol research, especially epidemiological studies. In describing alcoholism types, Jellinek depicted "Alpha Alcoholism" as a purely psychological continued dependence or reliance upon the effect of alcohol to relieve bodily or emotional pain (Jellinek, 1960:36-39). Using Jellinek's definition, Cahalan (1970) included psychological dependence on alcohol as one of his eleven specific "drinking problems." In his measure are items on drinking to alleviate depression or nervousness or to escape from the problems of everyday living. In their "definitions of drinking" scale, Mulford and Miller (1960) included a number of items which could be classified under the rubric of psychological dependence.

The psychological dependence measure used in this study is comprised of six questions (Questions 52 through 56 and 58) taken from Cahalan's index of "escape reasons for drinking" (Cahalan, Cisin and Crossley, 1969). Factor analysis of these questions resulted in one factor with eigenvalue greater than 1.0 which accounted for 52 percent of the variance in the responses. Factor loadings of the retained factor (See Appendix B, Table XXVI) are high and nearly equal in magnitude. Therefore, responses to the six questions were simply summed to obtain psychological dependence scores (See Appendix B, Table XXV) which can range in value from 6 through 30. Coefficient alpha for the six question measure was computed to be .732, indicating good reliability for the measure.

e. Organizational Trust(TRUST) and Program Worth (WORTH). As mentioned previously, the survey instrument contained a series of five questions (Questions 31-35) dealing with feelings about Air Force policy toward alcoholism and alcohol treatment programs. It was felt that some measure(s) could be derived from these questions which might prove useful in further data analysis.

Accordingly, these five questions were factor analyzed in order to examine their dimensionality. This analysis resulted in two factors with eigenvalues greater than 1.0, together accounting for 64.4 percent of the variances in the responses. One factor consisted primarily of responses to Questions 33-35 and could be interpreted as trust or belief in stated Air Force policy toward treatment and rehabilitation of alcoholics. A measure composed of these three questions was formed and termed "Organizational Trust." The second factor was composed primarily of responses to Questions 31 and 32 and could be interpreted as describing feelings about the worth or effectiveness of Air Force alcohol treatment programs. A measure composed of these two questions was termed "Program Worth."

As with other composite measures, factor loadings (See Appendix B, Table XXVI) for both measures were high and nearly equal in magnitude. Therefore, scores were computed by simply summing responses to individual questions (See Appendix B, Table XXV). Organizational Trust scores can range

in value from three to 15, while Program Worth scores can range from two to 10. Coefficient alpha for the Organizational Trust and Program Worth measures was computed to be .706 and .489 respectively. While the value for the Program Worth measure is somewhat lower than that computed for the other composite measures, this can be attributed primarily to the small number of items comprising the measure and, hence, both measures were judged to be reliable.

2. Frequency Measures. The survey instrument contains a number of questions which are designed to measure how frequently individuals engage in certain acts associated with drinking alcoholic beverages. The first, and most important, of these measures is the total volume of alcohol consumed. However, measures of days missed from work due to drinking and frequency of intoxication are also included.

a. Volume of Alcohol Consumed(VT). There are at least two schools of thought concerning the measurement of total volume of alcohol consumed. One line of reasoning assesses consumption levels on typical days and the number of days on which alcohol is consumed. The two figures are multiplied to estimate total volume.

The second approach is to measure the number of days on which various amounts of alcohol are consumed (e.g., 4-7 or 8-11 drinks). Total volume, essentially based on episodic consumption patterns, is then estimated by summing the volume consumed at each drinking level. Polich and Orvis's

total volume index, the one chosen for use in this research effort, incorporates the advantages of both approaches. It measures both the typical drinking pattern of an individual (over the past 30 days) and his/her pattern of episodic, higher consumption (during the past year) (Polich and Orvis, 1978:135).

Typical drinking patterns are examined first. Respondents indicating that they had not consumed any alcoholic beverage during the past 30 days (Question 38) are assigned a typical volume (QF) of zero ounces of ethanol/day. For remaining respondents, daily volume was computed separately for beer, wine, and hard liquor using parallel procedures. First, the frequency at which each beverage was consumed during the past 30 days was determined (Questions 39, 41, and 44). Each frequency was computed in terms of daily probabilities of consumption. The response alternatives and frequency codes are listed in Table III (Polich and Orvis, 1978:135).

The next step was to compute the typical quantity of each beverage drank on days when the given beverage was consumed (Questions 40, 42, and 45). Codes used in these questions are generally self-explanatory. Where a range of quantities was indicated, the range midpoint served as the value; for example, 8-11 cans of beer was coded as 9.5 cans. Maximum responses were coded as 22 cans of beer, 15 glasses of wine, and 30 drinks of hard liquor respectively.

TABLE III

Frequency Codes for Typical Drinking Days

Response Alternative*	Frequency Code	Method of Calculation
Every Day	1.000	7/7
Nearly Every Day	0.786	5.5/7
3-4 Times a Week	0.500	3.5/7
Once or Twice a Week	0.214	1.5/7
2-3 Times a Month	0.083	2.5/30
Once	0.033	1/30
Zero Days	0.000	0/30

* Frequency of consumption of given beverage during past 30 days.

Quantities were converted to ounces by multiplying by 12 in the case of beer, 4 in the case of wine, and by the number of ounces specified in an average drink (Question 46) for hard liquor. In the latter instance, missing responses were coded as one ounce and the maximum response was five ounces.

Once typical quantity had been determined for each beverage, it was multiplied by the frequency of drinking that beverage. The resulting product constituted a measure of the number of ounces of the given beverage consumed daily as a result of the individual's typical drinking behavior. The

final step in computing typical volume (QF) was to transform these ounces to ounces of ethanol for each beverage. This was accomplished by weighting ounces of beer by .04, hard liquor by .43, and wine by either .18 or .12 depending upon whether the respondent indicated he or she normally drank fortified wine or not (Question 43). Except when stated to the contrary, missing or out of range responses to any question comprising the typical volume measure were coded as zero (Polich and Orvis, 1978:137).

Aside from typical drinking days, most persons will also experience atypical days on which larger quantities of alcohol are consumed. To the extent that amounts consumed on these days are close to the individual's typical volume or the number of atypical days is small, the impact on daily volume indices is minimal. However, as the quantity of alcohol consumed or the number of such days becomes large, these episodes of heavier drinking have considerable impact on an individual's mean volume.

In light of the possible impact of atypical alcohol consumption, the frequency of consuming eight or more cans, glasses, or drinks of beer, wine, or hard liquor respectively was measured (Questions 47, 48, and 49). Because the intention was to measure episodic behavior, the frequency questions pertained to the past year rather than just the past 30 days. The quantity of ethanol consumed on such days was coded as 5 ounces. The response alternatives and corresponding

frequency codes for these questions are listed in Table IV (Polich and Orvis, 1978:137-139).

TABLE IV

Frequency Codes for Atypical High Consumption Days(D)

Response Alternative*	Frequency Code	Method of Calculation
Every Day or Nearly Every Day	312	6x52
3-4 Times a Week	182	3.5x52
Once or Twice a Week	78	1.5x52
1-3 Times a Month	24	2x12
7-11 Times	9	9
3-6 Times	4.5	4.5
Once or Twice	1.5	1.5
Never	0	0

* Frequency of atypical high consumption days for given beverage during past year.

The volumes resulting from typical and atypical consumption days for a given beverage were combined using the following formula, resulting in a total volume measure for that beverage:

$$\frac{5D + QF(365-D)}{365} \qquad (1)$$

where

D=number of atypical high consumption days for a given beverage (beer, wine, or whiskey)

QF*=the typical daily volume consumed of that same beverage

The composite volume measures for the three beverages were then summed, to equal the total volume measure(VT). In doing so, the following constraints were applied: (1) persons indicating no consumption of alcoholic beverages during the past year (Question 38) were given scores of 0 on the composite indices (for each beverage) and on the total volume measure; and (2) the maximum value permitted for the composite and total volume measure was 30 ounces of ethanol/day (Polich and Orvis, 1978:139-140).

b. Days Missed from Work Due to Drinking(DAYSOFF). One of the more serious consequences of problem drinking concerns poor job performance and/or lessened worker productivity. An attempt to capture this consequence is made through a measure of days missed from work due to drinking.

This particular measure is derived from questions dealing with various types of work impairment due to alcohol. Each item is measured in terms of working days lost. First, days missed due to drinking, hangover, or illness (Question 64) are counted as full days' production lost. Each daily

* If $QF \geq 5$, $D=0$

occurrence of arriving late to work or leaving early (Question 62) is coded as .25 production days lost. Working at a lower level of performance (Question 64) is coded in the same manner and summed with the other two figures. Because of the probable overlap between a report of "being high" (Question 65) and a report of "working at lower productivity" (Question 64), the instances of "being high" are counted only to the extent that days reported as "high" exceed days reported "working at lower productivity." These excess days are also coded as .25 production days lost and, when summed with the other three totals, result in a total measure of days missed from work due to drinking. The maximum response for any of the aforementioned questions was 40 days. Midpoints were coded whenever a response involved a range of days (Polich and Orvis, 1978:37-38).

c. Intoxication Index(INTOX). Polich and Orvis (1978) contend that a person who drinks to intoxication on a fairly frequent basis runs an increased risk of becoming adversely affected by alcohol if not already affected. Since their total consumption measure(VT) did not portray such patterns of inebriation, they constructed an "intoxication index."

The index was derived from six questionnaire items which indicate drinking to the point where impairment of the senses is likely. These six items include: (1) drinking 8 drinks or more in one day (Question 40 or 42 or 45 or 47 or

48 or 49); (2) driving after drinking 5 drinks or more in two hours (Question 96); (3) being drunk (Question 87); (4) being sick from drinking (Question 94); (5) being unable to stop drinking before becoming intoxicated (Question 93); and, (6) staying intoxicated for several days at a time (Question 71). The index was scored simply as the number of items (among the six in the scale) which an individual reported as occurring at least once per month over the past year (Polich and Orvis, 1978:55-56).

3. Drinking Problem Areas. From responses to a nationwide survey of drinking practices, Cahalan (1970) was able to define eleven specific problem areas associated with alcoholic consumption. One of these areas, psychological dependence, has already been described. Several other problem areas were, at least partially reconstructable from items in the survey instrument and proved useful in data analysis, especially in testing hypotheses about the relationship between results of this study and those of Cahalan.

a. Binge Drinking. The criterion for qualifying on this potential problem was being intoxicated for several days at a time on at least one occasion during the past year (Question 71).

b. Symptomatic Drinking Behavior. Items in this index are based on Knupfer, Mulford, and Miller's measures of Jellinek's list of signs of physical dependence and loss of control (McCully, 1978:20). Based on these measures

which were included in the survey instrument, a person was said to exhibit symptomatic drinking behavior if, at least once a month, one experienced either shakes (Question 92 or 95) or memory loss (Question 90) due to drinking, drank the first thing in the morning (Question 91) or was unable to stop drinking before becoming intoxicated (Question 93).

c. Heavy Drinking or Frequent Intoxication. This measures regular intoxication or regular drinking of sufficient quantities of alcohol that puts the respondent at risk of intoxication (McCully, 1978:19). To be classified as a heavy drinker, one had to drink: a minimum of five or more drinks at least once a week; eight or more drinks twice during the past two months; twelve or more drinks twice during the past year; or get drunk at least once per week.

d. Loss of Control. A person exhibited loss of control over drinking if he/she found it difficult to stop before becoming intoxicated at least once a month (Question 93).

e. Spouse Problems. This particular index sought to measure how alcohol had affected marital relationships. An individual had a problem with his or her spouse if the spouse had left (Question 80) or threatened to leave (Question 78) because of drinking during the past year.

f. Job Problems. A person was considered to have a job problem associated with alcohol if, during the past year: one received disciplinary action because of drinking;

received a lower performance rating because of drinking; had an illness associated with drinking which kept one from work; got high or tight at work; or had one's supervisor tell one to cut down on his/her drinking.

g. Police Problems. Individuals had a police problem associated with drinking if they: were reported or arrested by a police officer for drinking and driving or a drinking incident not related to driving (Question 72 or 74); spent time in jail for drinking (Question 75); or drinking contributed to an accident where they or others were hurt (Question 76 or 77).

h. Health or Injury Problems. Criteria for a health problem due to drinking were: a physician had warned the respondent to reduce drinking (Question 70); an illness connected with drinking had kept the respondent from normal activities (Question 67); or a respondent had been hospitalized for an alcohol related illness (Question 99). Injury criterion was simply that an individual had received an injury because of drinking (Question 76).

4. Demographics. Most of the demographic variables derived from the survey instrument and used in data analysis are straightforward and easily understood, such as sex (Question 6) and age (Question 5). A few such variables, however, are more complex in nature and merit further description.

a. Salary. Unfortunately, the survey instrument contains no items pertaining to a respondent's income or

salary level, so such information had to be obtained indirectly. Both pay system (Question 2) and grade level (Question 3) were known. With this information and data supplied by the Air Force Logistics Command Directorate of Civilian Personnel(AFLC/DPC), an individual's basic income could be computed.

Since hourly wage rates for General Schedule(GS) employees are standard for each grade level, hourly rates were assigned simply on their responses to Questions 2 and 3. For Wage Grade(WG), Wage Leader(WL), and Wage Supervisor(WS) employees' wage rates vary not only by grade levels, but also by the geographic region in which the individual is employed. Therefore, for these individuals it was necessary to consider also the base at which they were employed when assigning hourly rates. Wage rates for other employee categories could not be computed. Therefore, individuals who were not GS, WG, WL, or WS employees were not given salary figures. Since these individuals constitute only .1 percent of the sample, it was felt this action would not discredit analysis results using salary information. Based on AFLC/DPC guidance, the second step of all wage rates was utilized.

Once wage rates were assigned, annual base salaries were computed by multiplying rates by 2080, the number of normal duty hours in a year. There are some shortcomings with these salary figures, however. First, they represent base figures only and do not include such items as overtime

and fringe benefits. Second, it does not take into account any additional income obtained from "moonlighting" on a second job. Finally, this figure may or may not represent total "household" income, as it is impossible to determine whether a married person's spouse has an income source (in the case of married female civilian employees, it would seem highly likely).

b. Socioeconomic Status. Socioeconomic status has proven to be a good discriminator of alcohol misuse by both clinicians and epidemiologists (McCully, 1978:13, 31-32). A version of this particular variable involves a combination of salary with educational data. More specifically, persons with an annual base salary of less than $11,615 (1978 dollars) and less than a high school education were coded with low socioeconomic status (McCully, 1978:31). All others were coded with high socioeconomic status.

c. Geographic Region. Cahalan reported regional differences in the rates of alcohol problems. It appeared this variability was tied to the relative degree of influence the Temperance Movement had had in a specific locale. Accordingly, respondents were coded as coming from a dry region where the Temperance Movement influence was greatest or a wet region where it had relatively less impact. A list of states within dry regions is supplied in Table V (McCully, 1978:30-31).

d. Parental Variables. Clinical researchers

TABLE V

Dry Geographic Regions

South Atlantic	West North Central
Florida	Kansas
Georgia	Missouri
S. Carolina	Iowa
N. Carolina	Nebraska
Virginia	S. Dakota
W. Virginia	N. Dakota
East South Central	Minnesota
Alabama	Mountain
Mississippi	New Mexico
Tennessee	Arizona
Kentucky	Colorado
West South Central	Utah
Louisiana	Nevada
Arkansas	Wyoming
Oklahoma	Idaho
Texas	Montana

report a strong association between alcohol problems and individuals who had parents with similar problems (McCully, 1978:11). To test this relationship, a variable was created which categorized respondents on the basis of whether they indicated they had a father (Question 36) or mother (Question 37) who drank frequently or heavily. With these same two questions, another variable was created which categorized respondents who reported that they had not lived with one or both of their parents.

5. Problem Drinker Criteria. As indicated problem drinkers as a group are simply a combination of those individuals classified as either alcohol addicted or adversely affected by alcohol. So, when speaking of problem drinking, one is really addressing how alcohol addiction or adverse affects are determined.

a. Alcohol Addiction Criteria. In defining alcohol addiction, the author addressed two manifestations of the state; physical (or physiological) dependence on alcohol and loss of control over alcohol consumption. There is considerable research to support the use of these two concepts in our definition.

In distinguishing among various types of alcoholism, Jellinek (1960) defined "Gamma" alcoholism as that species of alcoholism in which (1) acquired increased tissue tolerance to alcohol, (2) adoptive cell metabolism, (3) withdrawal symptoms and "craving," i.e., physical dependence, and

(4) loss of control are involved (Jellinek, 1960:36-39). In Gamma alcoholism there is a definite progression from physiological to physical dependence and marked behavior changes. Jellinek goes on to state that Gamma alcoholism is what members of Alcoholics Anonymous recognize as alcoholism to the exclusion of all other species. Mulford (1977) in developing the "Preoccupation with Alcohol" scale of his Alcohol Stages Index used a number of items alluding to physical dependence and loss of control. He further concluded that this particular scale could be a useful index for identifying "alcoholics" in the general population (Mulford, 1977: 291). Finally, Cahalan defined one of his eleven specific drinking problem areas, symptomatic drinking, as behavior symptomatic of Jellinek's Gamma alcoholism insofar as exhibiting signs of physical dependence and loss of control (Cahalan, 1970:28-29). Persons qualifying for this category were considered to be, or at a high risk of becoming, addicted to, or unduly dependent upon alcohol.

Admission of being unable to stop drinking before becoming intoxicated (Question 93), an item taken from Mulford's "Preoccupation with Alcohol" scale, serves as the indicator of loss of control over alcohol consumption. In portraying physical dependence, the author relied on National Council on Alcoholism criteria (See Chapter I, p. 2), which states such dependency is manifested by tremors or shakes (Questions 92 and 95) when the intake of alcohol is

interrupted, and alcoholic blackout periods (Question 90). In addition, morning drinking (Question 91) is included as an indicator of physical dependence in that clinicians believe such a practice is undertaken to avoid the onset of tremors or other withdrawal symptoms (Polich and Orvis, 1978:34).

In order for it to qualify as a conclusive manifestation of alcohol addiction, an individual had to report occurrence of an indicator at least once a month for the past year. In addition, the presence of at least two of the four indicators (tremors or shakes, loss of control, morning drinking, and blackout periods) was necessary in order to categorize an individual as alcohol addicted. Reported monthly occurrence of either Question 92 or Question 95 or both count as one indication.

Indications and criteria of alcohol addiction are summarized in Table VI. At this time it is appropriate to point out one shortcoming associated with the survey instrument. Some of the manifestations of physiological dependence on alcohol are also symptomatic of dependence on barbiturates and various nonbarbiturate sedative-hypnotic drugs (Essig, 1974). Unfortunately, the respondents were not questioned about other drug usage. Therefore, the assumption has to be made that occurrence of these manifestations is due solely to alcohol consumption and not barbiturate usage or, as is more likely, a combination of the two.

TABLE VI

Indicators of and Criteria for Alcohol Addiction

Indicator	Item Wording
1. Tremors (Shakes)	I had the shakes because of drinking (Question 95) My hands shook a lot in the morning after drinking (Question 92)
2. Morning Drinking	I took a drink the first thing when I got up in the morning (Question 91)
3. Blackouts	I awakened the next day unable to remember what I had done while drinking (Question 90)
4. Loss of Control	I could not stop drinking before becoming intoxicated (Question 93)

CRITERIA: Occurrence of two or more indicators at least once a month over the past year.

The items comprising criteria for alcohol addiction were principal component factor analyzed in order to examine their dimensionality (Nie, et al., 1975). The first principal component explained 72.6 percent of the variance in the responses and was the only factor with an eigenvalue greater than 1.0. In fact, the eigenvalue for the first factor is over seven times as large as the next largest eigenvalue. Strong support is consequently provided for the assumption that all of the questions are measures of the same underlying factor. All loadings on the first factor (See Appendix C, Table XXVII) are quite high. Consequently, all of the questions are important in deriving the overall underlying factor.

Internal consistency of the "alcohol addiction" items was examined by randomly splitting the four symptoms (Table VI) into two equal groups and computing percentages of alcohol addicted individuals based only on the symptoms within each group. The resultant figures were six and seven percent respectively. Using the Student's t statistic (Nie, et al., 1975:268) it can be shown that these two percentages were not statistically different ($p<.05$). This indicates that the items comprising the measure of alcohol addiction have a high degree of internal consistency, further evidence that a single factor is being measured.

b. Adverse Affects Criteria. The term "adverse affects" and its derivation comes from the research done by

Polich and Orvis (1978) on drinking problems among U.S. Air Force military personnel. As the definition implies, adverse affects are those serious consequences of drinking which result in concrete and serious damage or disruption to the individual's life or to the Air Force.

Polich and Orvis derived 15 such serious consequences which are listed in Table VII, grouped according to the type of disruption or damage caused by the consequence. Except for the damaging consumption level ($VT \geq 5.0$) and the three or more days missed from work due to drinking, all other consequences qualify for being serious if an individual reports their occurrence at least once during the past year. The five ounce damaging consumption level was chosen because people who drink at this level over an extended period run a very high risk of experiencing cirrhosis of the liver or at least pre-cirrhotic conditions which imply disability. In the case of fights, this consequence was only considered for individuals whose frequency of fighting while drinking exceeded their frequency of fighting while not drinking, indicating alcohol consumption was a major contributing factor to their belligerence. Finally, to be classified as being adversely affected by alcohol, an individual would have to have experienced one or more serious consequences (Polich and Orvis, 1978:37, 42, 43).

Many, if not most, of Polich's serious consequences have their foundation in earlier epidemiological research.

TABLE VII

Serious Consequences of Drinking

Work Impairment

Official punishment (Question 69)
Lower performance rating (Question 68)
Three days from work missed due to drinking

Physical Damage

Illness lasting one week (Question 67)
Hospitalization (Question 99)
Visits to physician (Question 100)
Accident with self-injury (Question 76)
Accident with injury to others or property damage (Question 77)
Damaging consumption level (VT≥5.0)

Social Disruption

Spouse left (Question 80)
Spouse threatened to leave (Question 79)
DWI arrest (Question 72
Nondriving arrest (Question 73)
Jail (Question 75)
Fights (Question 88)

Some are almost identical with items in Mulford's "Trouble Due to Drinking" subscale of his Iowa Alcoholic Stages Index (Mulford, 1977). The same can be said of the similarity between most of the consequences and items comprising several of Cahalan's (1970) drinking problems, especially those dealing with the job, spouse, police, personal health, and belligerence (Cahalan, 1970:27-35).

A principal component factor analysis with iteration (PA2) (Nie, et al., 1975) of the items comprising adverse affects resulted in three factors with eigenvalues greater than 1.0, accounting for 59.9 percent of the variance in the responses. Appendix B, Table XXVIII contains the factor structure which resulted from a Varimax orthogonal rotation of the three retained factors. The names associated with each factor were suggested by the nature of questions which loaded heavily on each factor and previous categorizations of the items (See Table VII). Factor analysis indicates that "adverse affects" is a multidimensional, rather than a unitary concept.

Internal consistency of the fifteen serious consequences was examined in the same manner as the symptoms of alcohol addiction. The resultant figures, however, were 1.7 and 4.7 percent respectively. The wide disparity in these two percentages points out a definite lack of correlation among the various serious consequences much as their authors had envisoned (Polich and Orvis, 1978:9).

C. Reliability

One accepted definition of reliability is "the proportion of true variance in obtained test scores" (Guilford, 1958:350), i.e., it involves the ratio of error (or true) variance to the actual variance of some test. No single measure of reliability is sufficient when dealing with the numerous diverse measures and variables involved in this research effort. Rather a number of reliability checks are necessary before judging the overall reliability of the survey instrument.

One popular method of determining test or measure reliability concerns the equivalence of parts for measurement purposes or the "internal consistency" of the test (Committee of American Psychological Association, 1978:49). Coefficient alpha, a measure of internal consistency was computed for all the composite measures, and the results were satisfactory in all cases. Three other responses can be checked for internal consistency because the same or very similar questions are asked more than once in the survey instrument. These responses are: (a) time spent in jail due to drinking (Question 75 and Question 82); (b) admission of having received treatment for an alcohol problem (Question 97 and Question 85 or 86); and (c) an alcohol related illness lasting greater than a week (Question 64 and Question 67). To reconcile differences in response sets, each question was recoded into a zero-one dichotomous variable. The

PEARSON CORR procedure (Nie, et al., 1975:276-285) was used to measure the degree of association between similar response pairs in the form of Pearson correlation coefficients.

The results of correlation analysis of the three response pairs are depicted in Table VIII. While the degree of association is significant at the .05 level for all three pairs, the figures are still somewhat smaller than had been expected, especially in the case of the pair concerned with illnesses associated with drinking. There are three possible explanations for dissimilarities in paired item responses: (1) inability of completely reconciling differences in response sets; (2) a certain degree of dissimilarity in the type of information solicited by each question in a response pair; or (3) unreliable data. A reappraisal of the wording of Questions 64 and 67 lead the author to believe that differences in data requested could account for the low correlation in this response pair. Reporting more than seven days off work because of drinking, a hangover, or an illness caused by drinking (Question 64) does not imply the days missed are consecutive, as would be the case when reporting an illness which kept one from duty for a week or longer (Question 67). In the case of the other two pairs, the relatively low degree of association is not so easily explained. It can only be assumed that unreliable data has had little or no impact on the reported figures.

Despite the somewhat disappointing results just described,

TABLE VIII

Correlation Analysis of Similar Response Pairs

Response Admission	Response Pair	Pearson Correlation Coefficient	Significance Level
Spent time in jail due to drinking	Q75/Q82	.5445	.001
Received treatment for an alcohol problem	Q97/Q85 or Q86	.4013	.001
An illness of a week or longer associated with drinking	Q64/Q67	.1576	.001

the earlier reliability checks of composite measures, coupled with initial attempts to remove as much unreliable data as possible (See Screening and Weighting Cases, p. 12) lead the author to conclude the survey instrument is reliable.

D. Validity

Validity is concerned with what a test measures. It refers to the appropriateness of inferences from test scores or other forms of assessment. It is important to note that validity is itself inferred not measured. Validity coefficients may be calculated, but validity for a particular aspect of test use is inferred from this collection of

coefficients (Committee of American Psychological Association, 1974:35).

There is more than one type of validity and the type depends upon the kinds of inferences one might wish to make from test scores. Criterion-related validities apply when one wishes to infer an individual's most probable standing on some other variable called a criterion. If the test score and the criterion score are determined at essentially the same time, one is studying concurrent validity. Certain instrument items can be checked for concurrent validity because the same responses are solicited from individuals and supervisors of individuals. These reported items are: lower performance ratings because of alcohol abuse (Question 68 and Question 105); disciplinary action taken because of problems related to alcohol abuse (Question 67 and Question 106); number of people told to cut down on their drinking (Question 83 and Question 103); and, number of people referred to a treatment program for alcohol (Question 86 and Question 104).

A comparison of the percentages of people experiencing the four aforementioned alcohol related problems, as reported by individuals and supervisors is depicted in Table IX. As can be seen, the supervisory estimates are all much higher than the self-report figures, in most cases by more than a factor or two. It appears that we are witnessing a phenomenon reported by other researchers; namely the tendency

TABLE IX

Self-Report and Supervisor Estimates of Alcohol Related Problems

Problem	% Personnel Experiencing Problem	
	Self-Report From Survey	Supervisor Report
Lower Proficiency Report	.7 (Q68)	1.5 (Q105)
Disciplinary Action	.5 (Q69)	.8 (Q106)
Warned to Cut Down Drinking	.9 (Q83)	2.5 (Q103)
Treatment Program Referral	.4 (Q86)	1.1 (Q104)

of problem drinkers to underestimate their association with alcohol. As such, the author can only repeat an earlier statement about the results of this research effort: any figures derived as a result of the forthcoming data analysis must be considered as only lower bound estimates of the severity of the problem.

Construct validation is involved whenever a test is to be interpreted as a measure of some attribute which is not "operationally defined" (such as "alcohol addiction"). The problem faced by the investigator is what constructs account for variance in test performance (Cronbach and Meehl, 1955: 282).

One method of checking for construct validity is to factor analyze a test or measure and examine its underlying dimensionality. All the composite measures and the two sets of problem drinking criteria were factor analyzed with the results as expected in every case. Comparing group differences on a measure through hypothesis testing, is another means of examining construct validity. The results of such tests in term of validating adverse affects and alcohol addiction criteria are discussed in Chapter III.

E. Research Methodology

Once the data had been gathered and edited and the various measures and variables had been formed, the analysis of the data proceeded according to the data analysis flow diagram depicted in Figure 1.

The initial step in the analysis was the formulation of problem drinker categories based on criteria previously discussed. Next, comparisons were made of the characteristics of each group with the other and with non-problem drinkers.

1. Hypothesis Tests. The next major step in the analysis sequence is to test a number of hypotheses which compare the results of this study with those of previous alcohol research. It is hoped that this particular process would not only aid in validating the criteria for determining alcohol addiction and adverse affects, but also begin the process of discerning both predictors of alcohol consumption levels and discriminators of problem drinking categories.

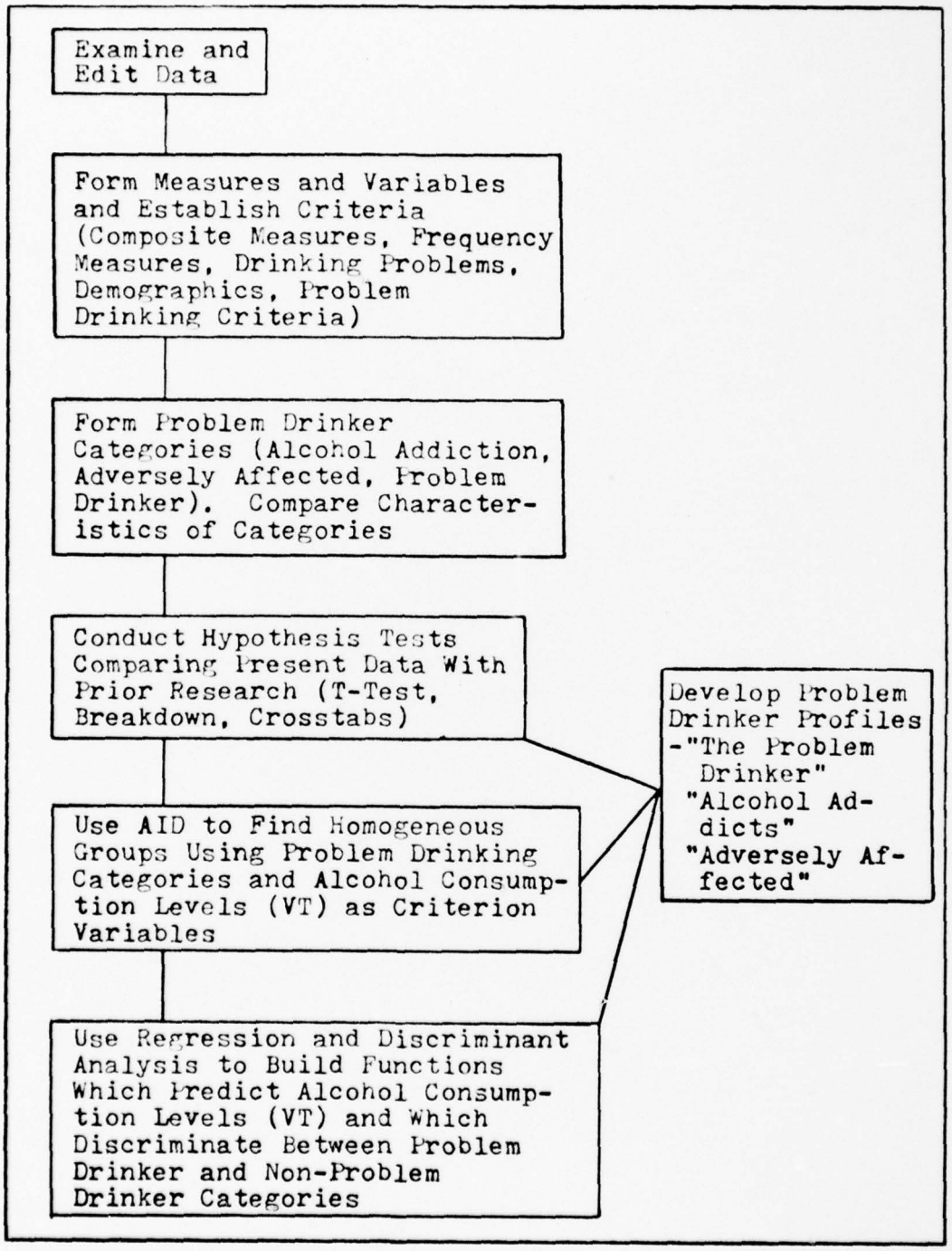

Figure 1. Data Analysis Flow

If the hypothesis involved a comparison of two group mean values for a certain criterion variable, then the T-TEST procedure was used (Nie, et al., 1970:207-275). All were one-tailed tests with the null (H_o) and alternative (H_1) forms of the hypotheses as follows:

$$H_o: \ \mu_1=\mu_2$$

$$H_1: \ \mu_1>\mu_2 \text{ or } \mu_1<\mu_2$$

where μ_1 and μ_2 represent the two population means. If the hypothesis involved examining more than two population means, then the BREAKDOWN or the CROSSTABS procedure was used dependent upon whether the dependent variable was interval or nominal in nature (Nie, et al., 1970:218-267). In this case the null and alternative hypotheses took the following forms:

$$H_o: \ \mu_1=\mu_2 \cdots =\mu_k$$

$$H_1: \ \mu_i\neq\mu_j \text{ (for at least one i and j)}$$

Finally, if the hypothesis involved an examination of the relationship between two interval scaled variables, the PEARSON CORR procedure was used (Nie, et al., 1970:280-286), and the null and alternative hypotheses were in the following form:

$$H_o: \ \rho=0$$

$$H_1: \ \rho>0 \text{ or } \rho<0$$

where ρ represents the degree of correlation between two interval scaled variables.

When depicting the results of hypothesis tests in

Chapter III, the alternative rather than the null forms of the hypotheses are given, because they best describe the results of prior research. An alternative hypothesis is considered supported if it is significant at the .05 level.

An example will probably help to clarify what has been said in the last two paragraphs. Suppose that previous research reports there are more male than female alcohol addicts. The null and alternative form of this hypothesis would be:

H_o: The percentages of male and female alcohol addicts are equal.

H_1: There is a significantly greater percentage of male than female alcohol addicts.

The alternative form would be depicted in the table. If the resultant t statistic was significant at the .05 level, then it would be supported.

2. Uses of AID. Once hypothesis tests were completed, homogeneous groups were created for four criterion variables: alcohol consumption(VT); and problem drinking along with its two subcategories of alcohol addiction and adverse affects. Such groups are defined as exhibiting statistically different scores than other groups on a particular criterion variable while possessing relatively similar criterion scores within the group. In the case of VT, an interval scaled variable, the scores represented various alcohol consumption levels. In the case of problem drinker categories, dichotomous variables, the scores represented percentages of category members.

Various combinations of demographic variables and composite measures were input as predictor variables to the Automatic Interaction Detection(AID) computer program (Gooch, 1972) in order to form these homogeneous groups. AID functioned to successfully split the total sample into smaller and smaller groups, selecting the demographic or composite measure with the most predictive "power" at each split. Interval scaled predictor variables were initially coded as though they were a nominal scale to allow for the emergence of curvilinear relationships and, also to explain the greatest amount of variance in the criterion measure. If results using such coded variables were uninterpretable, they were recoded as ordered variables. Certain other steps were taken in forming the final groups:

1. A minumum group size of 40 was specified. Also, no more than 20 splits were allowed.

2. Groups had to be interpretable in terms of the predictor variables from which they were formed. Uninterpretable groups were ignored.

3. The selection of demographic variables and composite measures used as predictors in any given AID run was based on their ability to explain variance in the criterion variable and to form interpretable groups.

4. Usually only groups based on four or less predictor variables were chosen. A group with an additional variable was considered if that variable resulted in a substantial

change in criterion scores.

Aside from the descriptive value of the groups themselves and the possibility of disclosing curvilinear relationships, certain other benefits are expected to be derived from AID analysis of the survey data. First, it identifies variables with great discriminatory or predictive power in terms of a given criterion measure. Second, it should indicate ways of splitting categorical data (such as marital status) which produce the best results in terms of explaining criterion measure variance. Finally, AID analysis could disclose interactions between predictor variables which have better explanatory power than the variables separately.

3. Regression/Discriminant Analysis. The basic objective of both regression and discriminant analysis is the same; to build a linear function, composed of a number of predictor variables, which explains the most variance in a given criterion measure. The REGRESSION procedure (McNichols, 1978) is used to build a function which best predicts alcoholic consumption levels(VT). The DISCRIMINANT procedure (Nie, et al., 1975) is used to build discriminant functions which maximally separate problem drinker categories from their non-drinking counterparts. Once these discriminant functions were built, their classificatory capabilities were analyzed.

4. Problem Drinker Profiles. Profiling problem drinkers is not a separate analysis step, but rather a synthesis

of the results of the three major analysis efforts. As the flow diagram in Figure 1 (p. 53) implies, hypothesis testing, AID analysis, and Regression/Discriminant analysis all provide material from which descriptions of each problem drinker category are derived.

F. Summary

The methodology employed in this research effort is designed specifically to analyze alcohol use and misuse among U.S. Air Force civilian employees. In line with this goal, it is hoped that not only will the extent of alcohol misuse be determined, but also ways of identifying potential alcohol misusers will be discovered.

The research sample was randomly chosen and responses were weighted to reflect the overall composition of the Air Force civilian employee population. A number of demographic variables, and composite measures are used in data analysis, many of which have proven successful in previous alcohol research. Three separate analysis efforts are conducted culminating in the development of problem drinker profiles.

III. Results and Discussion

A. Introduction

The analysis results for this research effort are presented in the order of the sequential methodology outlined in Chapter II. Readers should refer to Figure 1 (p. 53) in following the analytic process. Since examination and edit of the data, as well as measurement and criteria establishment are discussed in Chapter II, this chapter begins with the categorization and examination of problem drinkers.

B. Problem Drinker Categorization and Examination

Since problem drinkers are simply a combination of persons classified as alcohol addicts and adversely affected by alcohol, these two sub-categories are discussed separately.

Reported indication of alcohol addiction and the percentage of personnel classified within this category are depicted in Table X. When examining this table, one is struck with the near agreement among all the reported percentages. This is taken as further evidence that a single underlying concept is being investigated with these indicators, namely alcohol addiction.

The percentages of persons reporting serious consequences of drinking and the percentage classified as adversely affected by alcohol are depicted in Table XI. With percentages ranging from .4 to 3.4, it is easy to see there

TABLE X

Reported Indications of Alcohol Addiction

Indicator	Percent of Sample
Tremors or Shakes	.9*
Blackouts	1.2*
Morning Drinking	1.1*
Loss of Control	1.2*
Alcohol Addicts	1.1**

* reported at a frequency of one or more times a month

** two or more indicators reported at a frequency of one or more times a month

TABLE XI

Reported Serious Consequences of Drinking

Serious Consequence	Percent of Sample
Official punishment	.6
Lower performance rating	.8
Three days from work missed due to drinking	3.4
Illness lasting one week	1.1
Hospitalization	.6
Accident with self injury	.6
Accident with injury to others or property damage	.5
Damaging consumption level (VT≥5.0)	1.2
Spouse left	.6
Spouse threatened to leave	.9
DWI arrest	1.0
Nondriving arrest	.6
Jail	.6
Fights	.9
Visits to physician	.4
Persons Adversely Affected	5.9*

* One or more serious consequences reported; persons also classified as alcohol addicts were subtracted before arriving at final figure.

is not a high degree of internal consistency among the various serious consequences, as discussed in Chapter II (p. 46). As further evidence of this fact only 2.2 percent reported two or more serious consequences. The decision to include those individuals classified as both alcohol addicted and adversely affected by alcohol in the former category is based on the presumption that alcohol addiction is the more serious of the two classifications.

Having calculated the number of alcohol addicts (1.1%) and those persons adversely affected by alcohol (5.9%), the computation of problem drinkers becomes simply a matter of adding the two percentages and arriving at the following figure:

Problem Drinker 7.0% of Sample

In Table XII a comparison is made between problem drinkers and non-problem drinkers on a wide range of demographic variables and other measures. The figures reveal several variables/measures which might prove useful discriminators between problem drinking and non-problem drinking categories, such as sex, race, marital status, pay system and parental problem drinkers, as well as job satisfaction, stress, and work involvement measures. In addition, the pattern of scores on the three frequency measures (VT, DAYSOFF, and INTOX), as well as the psychological dependence measure, and the percentages of persons referred for

TABLE XII

Comparison of Characteristics of Problem Drinking and Non-Problem Drinking Categories

Characteristic	Category			
	Alcohol Addicted	Adversely Affected	Problem Drinker	Non-Problem Drinker
Sex:				
Male	81.7%	80.2%	78.8%	62.8%
Female	18.1%	18.0%	18.0%	36.5%
Age:				
20 yrs or less	7.5%	3.4%	4.1%	1.3%
21-24 yrs	7.7%	7.2%	6.4%	4.6%
25-30 yrs	11.1%	21.1%	19.5%	9.6%
31-39 yrs	20.8%	23.8%	23.4%	20.6%
40-48 yrs	19.6%	18.4%	18.6%	25.5%
49-60 yrs	27.4%	23.0%	23.8%	34.2%
Over 60 yrs	5.7%	3.0%	3.4%	4.6%
Mean Age	40.4 yrs	38.8 yrs	39.0 yrs	43.7 yrs
Years of Service:				
Less than 1 year	5.0%	2.8%	3.2%	2.5%
1-5 yrs	28.9%	25.5%	26.1%	19.2%
6-10 yrs	12.1%	16.6%	15.8%	15.7%
11-15 yrs	12.5%	15.1%	14.9%	18.2%
16-20 yrs	13.2%	12.8%	13.8%	12.8%
21-25 yrs	3.4%	7.6%	7.8%	11.9%
26-30 yrs	11.5%	12.9%	11.9%	11.3%
Over 30 yrs	12.6%	5.6%	6.7%	7.3%

TABLE XII (cont.)

Comparison of Characteristics of Problem Drinking and Non-Problem Drinking Categories

Characteristic	Category			
	Alcohol Addicted	Adversely Affected	Problem Drinker	Non-Problem Drinker
Marital Status:				
Married	66.8%	64.2%	64.6%	80.0%
Never Been Married	9.3%	14.4%	13.5%	7.8%
Divorced	15.0%	16.6%	16.3%	8.9%
Legally Separated	0%	2.8%	2.3%	.9%
Widowed	4.6%	1.0%	1.6%	2.4%
Race:				
Black	17.1%	14.8%	15.2%	8.6%
Hispanic	20.2%	14.4%	15.4%	9.2%
American Indian	5.1%	4.9%	5.0%	2.1%
Oriental	2.1%	3.1%	3.0%	3.0%
White/Other	52.2%	61.5%	59.9%	76.8%
Education Level:				
Non-High School Grad	21.9%	9.7%	11.8%	7.6%
High School Grad	39.8%	40.0%	40.4%	41.0%
Some College	20.9%	40.4%	37.0%	36.6%
College Grad	10.9%	4.6%	5.6%	6.6%
Post Graduate Work	7.1%	5.3%	5.5%	8.1%
Supervisory Status:				
Supervisor	28.4%	18.9%	20.5%	15.4%
Non-Supervisor	71.6%	80.7%	79.2%	84.6%

TABLE XII (cont.)

Comparison of Characteristics of Problem Drinking and Non-Problem Drinking Categories

Characteristic	Category			
	Alcohol Addicted	Adversely Affected	Problem Drinker	Non-Problem Drinker
Pay System:				
GS	39.7%	37.1%	37.6%	63.9%
WS	6.0%	5.8%	5.9%	4.0%
WL	5.2%	2.3%	2.8%	1.3%
WG	48.8%	54.5%	53.5%	30.7%
Other(UA, NA, AS, PS)	.3%	.2%	.3%	0%
Number of Dependents:				
None	21.3%	27.1%	26.2%	24.7%
One	27.3%	19.0%	20.3%	22.5%
Two	15.0%	15.9%	15.7%	19.0%
Three	10.6%	15.7%	14.8%	18.1%
Four	13.6%	13.1%	13.2%	9.0%
Five or More	9.5%	8.8%	8.9%	6.5%
Willingness to Receive AF Treatment for Alcohol Problem:				
Yes, would volunteer for help	41.4%	50.0%	48.5%	53.7%
No, would not volunteer	20.6%	11.2%	12.8%	8.4%
Don't know	33.7%	37.1%	36.5%	37.7%

TABLE XII (cont.)

Comparison of Characteristics of Problem Drinking and Non-Problem Drinking Categories

Characteristic	Category			
	Alcohol Addicted	Adversely Affected	Problem Drinker	Non-Problem Drinker
Parental Problem Drinkers:				
Had a parent who drank heavily	36.0%	33.8%	34.2%	21.8%
Did not have a parent who drank heavily	64.0%	66.2%	65.8%	78.2%
One Parent Family:				
Yes	15.3%	11.8%	12.4%	6.8%
No	84.7%	88.2%	87.6%	93.2%
Treatment Referral Within Past Year:				
Yes	24.3%	3.4%	7.0%	.4%
No	76.7%	96.6%	93.0%	99.6%
Geographic Region:				
Wet	36.9%	39.9%	39.4%	39.1%
Dry	55.7%	55.7%	55.7%	55.9%
Frequency Measures:				
VT	4.956 oz	2.43 oz	2.86 oz	.353 oz
DAYSOFF	6.082	3.66	4.07	.092
INTOX	3.878	1.132	1.601	.141

TABLE XII (cont.)

Comparison of Characteristics of Problem Drinking and Non-Problem Drinking Categories

Characteristic	Category			
	Alcohol Addicted	Adversely Affected	Problem Drinker	Non-Problem Drinker
Composite Measure Scores:				
Job Satisfaction	16.45	18.97	18.65	19.80
Work Involvement	12.48	13.57	13.39	14.56
Psychological Dependence	14.21	11.84	12.23	8.04
Stress	14.63	13.03	13.30	12.54
Trust	9.92	10.56	10.45	10.96
Worth	7.43	7.85	7.78	7.81
Monetary Losses Due to Drinking:				
Productivity Loss*	$36.07	$22.70	$24.84	$6.32
Air Force Property Damage*	$28.97	$14.53	$16.84	$2.97

* Dollars per individual per year

NOTE: Some percentages do not total to 100% because of out of range or missing responses to some questions on the survey instrument.

treatment within the past year, all tend to lead one to surmise that, when proceeding from non-problem drinking through adverse affects of alcohol to alcohol addiction, one is moving from a less to a more severe form of alcohol misuse.

From a pragmatic point of view, the monetary loss figures also support the increasing severity pattern just described. Productivity loss figures were computed by multiplying DAYSOFF figures by annual base salaries and dividing by 260, the number of workdays in a calendar year. Air Force property damage figures were obtained from responses to Question 84 of the survey instrument. The average productivity loss and property damage figures for the sample were $7.57 and $3.91 (per individual per year) respectively. Assuming that the sample is representative of the population as a whole, these figures can be multiplied by 230,000, the number of U.S. Air Force civilian employees, to arrive at totals of $1,741,100 in annual productivity loss and $899,300 in annual property damage. Combining these two figures results in a grand total of over $2,600,000 in losses to the Air Force annually because of alcohol misuse by its civilian employees. If the results of some of our instrument validity checks are any indication (See Validity, Chapter II, p. 49), the actual figure may be more than twice as great.

C. Hypothesis Testing

Orderly analysis of data can be done in two ways: model

seeking and hypothesis testing. Model seeking has the advantage of being free to combine explanatory variables in ways that may not have occurred to the researcher, thus increasing new or different trends within groups. AID and Discriminant/Regression analysis, discussed later in this chapter, are model seeking methods employed in conjunction with this research effort. On the other hand, hypothesis testing takes advantage of the extensive efforts of others who have already published similar studies. In this way, previously defined relationships can be tested using a different sample to obtain further confirmation and stronger support for generalization, or negation (McCully, 1978:7-8).

Some separate hypothesis tests were conducted on the data sample, the results of which are depicted in a series of accompanying tables. As discussed in Chapter II, each table provides a description of the alternative hypothesis, followed by the statistic used to test the hypothesis and a conclusion as to whether the hypothesis was supported. The majority of these hypotheses were developed and inscribed by Mary McCully in a companion thesis to this effort (McCully, 1978:104-111).

For ease of presentation and discussion, the hypothesis tests are broken down into four categories: (1) hypotheses dealing with alcohol addiction; (2) hypotheses dealing with adverse affects of alcohol; (3) hypotheses dealing with alcohol usage in general; and (4) hypotheses dealing with

behavior unrelated to alcohol.

1. Hypotheses Dealing with Alcohol Addiction. Included in this category are those hypotheses dealing with characteristics of alcohol addicts and those which compare alcohol addicts with other categories, such as adverse affects of alcohol. Most were derived from clinical research, although some were based on Polich and Orvis's (1978) epidemiological study of alcohol use among U.S. Air Force military personnel. The results of these tests are depicted in Table XIII.

A large majority of the hypotheses not supported were obtained from clinical studies. The results of hypotheses comparing alcohol addicts with those adversely affected by alcohol tend to support the earlier contention that alcohol addiction is a more severe form of alcohol misuse. They also support the possibility of certain variables/measures, such as sex, psychological dependence on alcohol, stress and parental problem drinkers, proving useful as discriminators between problem drinking categories.

It is interesting to note that the results of certain tests would support alternative hypotheses exactly opposite to those presented in the table. For example, a significantly greater percentage of alcohol addicts were under 35 years of age (Hypothesis #9); a significantly greater percentage of Air Force civilians in grades 6-8 were alcohol addicts than in grades 13-15 (Hypothesis #21); a significantly

TABLE XIII

Hypotheses Dealing with Alcohol Addiction

Alternative Hypothesis	Mean	Test Statistic	Conclusion
1. A significantly greater % of males(1) than females(2) are alcohol addicts.	$\bar{X}_1$=.012 $\bar{X}_2$=.006	t=3.51**	SUPPORTED
2. Male alcohol addicts(1) are significantly older than female alcohol addicts(2).	$\bar{X}_1$=42.4 $\bar{X}_2$=36.3	t=1.97*	SUPPORTED
3. A significantly greater % of male(1) than female(2) alcohol addicts have police problems.	$\bar{X}_1$=.393 $\bar{X}_2$=.447	t=-.28	
4. Male alcohol addicts(1) drink significantly more often than female alcohol addicts(2).	$\bar{X}_1$=.609[a] $\bar{X}_2$=.640[a]	t=-.29	
5. Male alcohol addicts(1) consume significantly more alcohol than female alcohol addicts(2).	$\bar{X}_1$=4.42[b] $\bar{X}_2$=4.12[b]	t=.19	
6. A significantly greater % of male(1) than female (2) alcohol addicts drink in the morning.	$\bar{X}_1$=.769 $\bar{X}_2$=.677	t=.83	
7. Female alcohol addicts(1) feel significantly more stress than male alcohol addicts(2).	$\bar{X}_1$=14.8 $\bar{X}_2$=14.6	t=.92	
8. A significantly greater % of female(1) than male (2) alcohol addicts had parents who drank heavily.	$\bar{X}_1$=.660 $\bar{X}_2$=.298	t=3.03**	SUPPORTED

TABLE XIII (cont.)

Hypotheses Dealing with Alcohol Addiction

Alternative Hypothesis	Mean	Test Statistic	Conclusion
9. A significantly greater % of alcohol addicts are over 35 years of age(1) than under 35(2).	$\bar{X}_1$=.009 $\bar{X}_2$=.015	t=-2.28	
10. A significantly greater % of alcohol addicts are currently not married(1) than are(2).	$\bar{X}_1$=.017 $\bar{X}_2$=.009	t=2.63**	SUPPORTED
11. Married alcohol addicts (1) are significantly older than single alcohol addicts(2).	$\bar{X}_1$=43.7 $\bar{X}_2$=33.8	t=3.94**	
12. Married alcohol addicts(1) have significantly fewer arrests for alcohol related incidents than single alcohol addicts(2).	$\bar{X}_1$=.99 $\bar{X}_2$=1.03	t=-.08	
13. Married alcohol addicts (1) consume significantly less alcohol than single alcohol addicts(2).	$\bar{X}_1$=3.94[b] $\bar{X}_2$=6.96[b]	t=2.23*	SUPPORTED
14. A significantly greater % of alcohol addicts are of low(1) rather than high(2) socioeconomic status.	$\bar{X}_1$=.012 $\bar{X}_2$=.010	t=.19	
15. A significantly greater % of blue collar (wage grade)(1) rather than white collar (general schedule)(2) employees are alcohol addicts.	$\bar{X}_1$=.017 $\bar{X}_2$=.007	t=4.40**	SUPPORTED

TABLE XIII (cont.)

Hypotheses Dealing with Alcohol Addiction

Alternative Hypothesis	Mean	Test Statistic	Conclusion
16. Low socioeconomic status alcohol addicts(1) consume significantly more alcohol than high socioeconomic status alcohol addicts(2).	$\bar{X}_1=4.71^b$ $\bar{X}_2=4.56^b$	t=.29	
17. A significantly greater % of non-high school graduate(1) are alcohol addicts than high school graduates(2).	$\bar{X}_1=.031$ $\bar{X}_2=.009$	t=3.42**	SUPPORTED
18. A significantly greater % of non-college graduates(1) are alcohol addicts than college graduates(2).	$\bar{X}_1=.011$ $\bar{X}_2=.013$	t=-.83	
19. A significantly greater % of Air Force civilians in grades 1-7(1) are alcohol addicts than Air Force civilians in grades 8-19(2).	$\bar{X}_1=.013$ $\bar{X}_2=.009$	t=1.70*	SUPPORTED
20. A significantly greater % of Air Force civilians in grades 1-5(1) are alcohol addicts than Air Force civilians in grades 6-8(2).	$\bar{X}_1=.014$ $\bar{X}_2=.009$	t=1.84*	SUPPORTED
21. A significantly greater % of Air Force civilians in grades 13-15(1) are alcohol addicts than Air Force civilians in grades 6-8(2).	$\bar{X}_1=.002$ $\bar{X}_2=.009$	t=-2.38	

TABLE XIII (cont.)

Hypotheses Dealing with Alcohol Addiction

Alternative Hypothesis	Mean	Test Statistic	Conclusion
22. A significantly greater % of non-supervisory personnel(1) are alcoholics than are supervisory personnel(2).	$\bar{X}_1$=.009 $\bar{X}_2$=.020	t=-2.78	
23. Alcohol addicts(1) show higher work involvement than non-alcohol addicts(2).	$\bar{X}_1$=14.5 $\bar{X}_2$=12.5	t=-6.20	
24. Alcohol addicts(1) are less satisfied with their jobs than non-alcohol addicts(2).	$\bar{X}_1$=17.0 $\bar{X}_2$=19.8	t=5.55**	SUPPORTED
25. Supervisor alcohol addicts(1) feel significantly more stress than non-supervisor alcohol addicts(2).	$\bar{X}_1$=16.0 $\bar{X}_2$=14.1	t=1.25	
26. Alcohol addicts(1) consume significantly more alcohol than those adversely affected by alcohol(2).	$\bar{X}_1$=4.96[b] $\bar{X}_2$=2.43[b]	t=4.44**	SUPPORTED
27. A significantly greater % of alcohol addicts(1) indulge in heavy drinking than those adversely affected by alcohol(2).	$\bar{X}_1$=.651 $\bar{X}_2$=.560	t=1.72*	SUPPORTED
28. Alcohol addicts(1) miss significantly more days from work due to drinking than those adversely affected by alcohol(2).	$\bar{X}_1$=6.08[c] $\bar{X}_2$=3.66[c]	t=2.38**	SUPPORTED

TABLE XIII (cont.)

Hypotheses Dealing with Alcohol Addiction

Alternative Hypothesis	Mean	Test Statistic	Conclusion
29. A significantly greater % of alcohol addicts(1) have police problems than those adversely affected by alcohol(2).	$\bar{X}_1$=.277 $\bar{X}_2$=.150	t=2.79**	SUPPORTED
30. A significantly greater % of alcohol addicts(1) are involved in accidents because of drinking than those adversely affected by alcohol(2).	$\bar{X}_1$=.221 $\bar{X}_2$=.100	t=2.93**	SUPPORTED
31. A significantly greater % of alcohol addicts(1) are hospitalized because of drinking than those adversely affected by alcohol(2).	$\bar{X}_1$=.190 $\bar{X}_2$=.091	t=2.42**	SUPPORTED
32. There is a difference in the percentages of alcohol addicts among the various pay systems.	See Footnote[d]	F=10.6**	SUPPORTED
33. There is a difference among various racial groups in percentages of alcohol addicts.	See Footnote[d]	F=8.54**	SUPPORTED
34. There are significant differences in the percentages of alcohol addicts among the various work functions.	See Footnote[d]	F=1.03	
35. There is a significant difference in educational levels between male and female alcohol addicts.		χ^2=9.26	

* p<.05
** p<.01

[a] Percentage of days in which alcoholic beverages are consumed

[b] VT

[c] DAYSOFF

[d] See Appendix D, Table XXIX for mean values.

greater percentage of supervisory personnel were alcohol addicts than non-supervisory personnel (Hypothesis #22); and alcohol addicts showed significantly less work involvement than non-alcohol addicts (Hypothesis #23).

In testing Hypothesis #32, wage leaders(WL) had the highest percentage of alcohol addicts, followed by wage grade(WG), wage supervisor(WS), and general schedule(GS) employees. Likewise, in testing Hypothesis #35, Blacks, Hispanics, and American Indians all had approximately the same percentages of alcohol addicts which were three times as high as those reported by Orientals and Caucasians/Others.

2. Hypotheses Dealing with Adverse Affects of Alcohol. The results of this category of hypothesis tests are depicted in Table XIV. Many of these hypotheses were based on Polich and Orvis's (1978) study.

As was the case with the hypotheses dealing with alcohol addiction, this particular series of tests again revealed a few likely discriminators between problem drinking categories, including stress, marital status, age and educational level. In addition, the pattern of results on hypotheses dealing with alcoholic consumption, physical addiction symptoms, days missed from work, and heavy drinking, coupled with the results of similar tests concerning alcohol addiction and the result of Hypothesis #46 all tend to support the view that adverse affects falls somewhere between non-problem drinking and alcohol addiction in its degree of severity

TABLE XIV

Hypotheses Dealing with Adverse Affects of Alcohol

Alternative Hypothesis	Mean	Test Statistic	Conclusion
36. A significantly larger % of those under 25 years of age(1) are adversely affected by alcohol than those over 25 years of age(2).	$\bar{X}_1$=.100 $\bar{X}_2$=.051	t=3.77**	SUPPORTED
37. A significantly greater % of single(1) than married(2) persons are adversely affected by alcohol.	$\bar{X}_1$=.096 $\bar{X}_2$=.049	t=6.73*	SUPPORTED
38. A significantly greater % of non-high school(1) than high school(2) graduates are adversely affected by alcohol.	$\bar{X}_1$=.068 $\bar{X}_2$=.053	t=1.58	
39. A significantly smaller % of college(1) than non-college(2) graduates are adversely affected by alcohol.	$\bar{X}_1$=.037 $\bar{X}_2$=.057	t=3.56**	SUPPORTED
40. A significantly greater % of civilians in grade 1-7(1) are adversely affected by alcohol than those in grades 8-19(2).	$\bar{X}_1$=.058 $\bar{X}_2$=.050	t=1.93*	SUPPORTED
41. Those adversely affected by alcohol(1) feel significantly more stress than those not so affected(2).	$\bar{X}_1$=13.0 $\bar{X}_2$=12.5	t=2.19*	SUPPORTED
42. Females adversely affected by alcohol(1) feel significantly more stress than males so affected(2).	$\bar{X}_1$=14.5 $\bar{X}_2$=12.6	t=3.43**	SUPPORTED

TABLE XIV (cont.)

Hypotheses Dealing with Adverse Affects of Alcohol

Alternative Hypothesis	Mean	Test Statistic	Conclusion
43. High socioeconomic status individuals adversely affected by alcohol(1) feel significantly more stress than low socioeconomic status individuals so affected(2).	$\bar{X}_1$=13.0 $\bar{X}_2$=14.7	t=-1.00	
44. Supervisors adversely affected by alcohol(1) feel significantly more stress than non-supervisors so affected(2).	$\bar{X}_1$=13.4 $\bar{X}_2$=12.9	t=.74	
45. Persons adversely affected by alcohol(1) consume significantly more alcohol than those not so affected(2).	$\bar{X}_1$=2.43[a] $\bar{X}_2$=.35[a]	t=16.3**	SUPPORTED
46. A significantly greater % of persons adversely affected by alcohol(1) exhibit one indication of alcohol addiction than those not so affected(2).	$\bar{X}_1$=.092 $\bar{X}_2$=.005	t=6.90*	SUPPORTED
47. A significantly greater % of persons adversely affected by alcohol(1) engage in heavy drinking than those not so affected(2).	$\bar{X}_1$=.559 $\bar{X}_2$=.093	t=21.0**	SUPPORTED
48. Persons adversely affected by alcohol(1) miss significantly more days from work due to drinking than those not so affected(2).	$\bar{X}_1$=3.66[b] $\bar{X}_2$=.092[b]	t=16.6**	SUPPORTED

TABLE XIV (cont.)

Hypotheses Dealing with Adverse Affects of Alcohol

Alternative Hypothesis	Mean	Test Statistic	Conclusion
49. There is a difference in percentages of persons adversely affected by alcohol among the various age groups.	See Footnote[c]	F=16.4**	SUPPORTED

* $p<.05$

** $p<.01$

[a] VT

[b] DAYSOFF

[c] See Appendix D, Table XXIX for mean values.

as a type of alcohol misuse.

In testing Hypothesis #49, the under 20 years of age group had the highest percentage of persons adversely affected by alcohol. The percentages steadily decreased until the over 60 years of age group, which had a slightly higher percentage than the 49-60 years of age group.

3. Hypotheses Dealing with General Alcohol Usage. As the name implies, this particular series of hypothesis tests deals with a number of subjects associated with alcohol consumption, but not with the specific categories of alcohol addiction and adverse affects of alcohol. They were derived from epidemiological research, primarily the work of Polich and Orvis (1978) and Cahalan (1970). Test results are depicted in Table XV.

Several rather general conclusions can be drawn from the results of this series of hypothesis tests. First, males significantly outdo females in a wide range of alcohol associated events, including alcohol consumption and involvement with a number of drinking problems. On the other hand, youth is not necessarily a powerful predictor of male involvement with the serious consequences of drinking. Marital status and geographic region are associated with alcohol consumption and misuse, while socioeconomic status is not.

While the results of Hypothesis #100 were significant, no pattern among the percentages for each work function could be perceived which would account for these differences.

TABLE XV

Hypotheses Dealing with General Alcohol Usage

Alternative Hypothesis	Mean	Test Statistic	Conclusion
50. A significantly greater % of men(1) than women (2) drink.	$\bar{X}_1$=.922 $\bar{X}_2$=.884	t=5.92**	SUPPORTED
51. Men(1) consume significantly more alcohol than women(2).	$\bar{X}_1$=.674[a] $\bar{X}_2$=.315[a]	t=6.48**	SUPPORTED
52. Males(1) suffer significantly more serious consequences of drinking than females(2).	$\bar{X}_1$=.181[b] $\bar{X}_2$=.069[b]	t=7.36**	SUPPORTED
53. A significantly greater % of men's wives(1) left them for drinking than women's husbands(2).	$\bar{X}_1$=.020 $\bar{X}_2$=.002	t=8.53**	SUPPORTED
54. A significantly larger % of males(1) than females(2) engage in fights when drinking.	$\bar{X}_1$=.022 $\bar{X}_2$=.011	t=4.08**	SUPPORTED
55. A significantly larger % of men(1) than women (2) engage in binge drinking.	$\bar{X}_1$=.057 $\bar{X}_2$=.017	t=9.98**	SUPPORTED
56. A significantly larger % of males(1) than females(2) get arrested for DWI.	$\bar{X}_1$=.082 $\bar{X}_2$=.020	t=13.6**	SUPPORTED
57. A significantly larger % of males(1) than females(2) spend time in jail for drinking.	$\bar{X}_1$=.067 $\bar{X}_2$=.008	t=15.7**	SUPPORTED
58. A significantly larger % of males(1) than females(2) drive after drinking 5 or more drinks.	$\bar{X}_1$=.193 $\bar{X}_2$=.080	t=15.2**	SUPPORTED

AD-A076 455 AIR FORCE INST OF TECH WRIGHT-PATTERSON AFB OH SCHOO--ETC F/G 5/10
ALCOHOL MISUSE AMONG USAF CIVILIAN EMPLOYEES.(U)
SEP 79 R D LARKINS
UNCLASSIFIED AFIT/GSM/SM/79S-9 NL

2 OF 3
AD
A076455

TABLE XV (cont.)

Hypotheses Dealing with General Alcohol Usage

Alternative Hypothesis	Mean	Test Statistic	Conclusion
59. Young adults (25 yrs old)(1) drink less frequently than older adults(2).	$\bar{X}_1$=.215[c] $\bar{X}_2$=.215[c]	t=3.12**	SUPPORTED
60. Young adults(1) consume more alcohol than older adults(2).	$\bar{X}_1$=.716[a] $\bar{X}_2$=.561[a]	t=1.57	
61. Young male adults(1) experience significantly more serious consequences of drinking than older adults(2).	$\bar{X}_1$=.400 $\bar{X}_2$=.142	t=2.35*	SUPPORTED
62. Women in their 30's and 40's(1) encounter significantly more serious consequences of drinking than women of other ages(2).	$\bar{X}_1$=.102[b] $\bar{X}_2$=.031[b]	t=-3.62	
63. A significantly larger % of young male adults (1) engage in symptomatic drinking than older male adults(2).	$\bar{X}_1$=.025 $\bar{X}_2$=.022	t=.24	
64. Young male adults(1) drink to intoxication more frequently than older male adults(2).	$\bar{X}_1$=.584[d] $\bar{X}_2$=.290[d]	t=3.34**	SUPPORTED
65. A significantly greater % of young male adults (1) encounter spouse problems than older male adults(2).	$\bar{X}_1$=.038 $\bar{X}_2$=.022	t=.95	
66. A significantly greater % of young male adults (1) encounter police problems than older male adults(2).	$\bar{X}_1$=.027 $\bar{X}_2$=.020	t=.34	

TABLE XV (cont.)

Hypotheses Dealing with General Alcohol Usage

Alternative Hypothesis	Mean	Test Statistic	Conclusion
67. A significantly greater % of young male adults (1) get arrested for DWI than older male adults(2).	$\bar{X}_1$=.013 $\bar{X}_2$=.013	t=.06	
68. Young male adults(1) have a significantly higher degree of psychological dependence on alcohol than older male adults(2).	$\bar{X}_1$=8.81 $\bar{X}_2$=8.51	t=.95	
69. A significantly greater % of young male adults (1) engage in fights after drinking than older male adults(2).	$\bar{X}_1$=.104 $\bar{X}_2$=.021	t=3.00**	SUPPORTED
70. A significantly greater % of older male adults (1) experience health/ injury problems than young male adults(2).	$\bar{X}_1$=.067 $\bar{X}_2$=.035	t=-1.89	
71. Women in their 40's(1) exhibit a significantly higher degree of psychological dependence on alcohol than women of other ages(2).	$\bar{X}_1$=7.95 $\bar{X}_2$=8.08	t=-.92	
72. A significantly greater % of single men in their 30's or 50's(1) engage in heavy drinking than other men(2).	$\bar{X}_1$=.334 $\bar{X}_2$=.184	t=5.93**	SUPPORTED
73. A significantly greater % of single men in their 20's(1) engage in binge drinking than other men(2).	$\bar{X}_1$=.036 $\bar{X}_2$=.015	t=1.57	

TABLE XV (cont.)

Hypotheses Dealing with General Alcohol Usage

Alternative Hypothesis	Mean	Test Statistic	Conclusion
74. A significantly greater % of single men in their 20's(1) exhibit loss of control over their drinking than other men(2).	$\bar{X}_1$=.124 $\bar{X}_2$=.054	t=2.92**	SUPPORTED
75. A significnatly greater % of single men in their 20's(1) encounter police problems than other men(2).	$\bar{X}_1$=.060 $\bar{X}_2$=.015	t=2.67**	SUPPORTED
76. A significantly greater % of single men in their 20's(1) engage in symptomatic drinking than other men(2).	$\bar{X}_1$=.022 $\bar{X}_2$=.027	t=-.45	
77. A significantly greater % of single men in their 40's(1) encounter job problems than other men(2).	$\bar{X}_1$=.187 $\bar{X}_2$=.132	t=1.92*	SUPPORTED
78. A significantly greater % of married men in their 20's(1) encounter spouse problems than other married men(2).	$\bar{X}_1$=.188 $\bar{X}_2$=.061	t=6.67**	SUPPORTED
79. A significantly greater % of married men in their 20's with children(1) experience spouse problems than other married men(2).	$\bar{X}_1$=.211 $\bar{X}_2$=.062	t=6.57**	SUPPORTED
80. A significantly greater % of married men in their 40's(1) encounter job problems than other married men(2).	$\bar{X}_1$=.240 $\bar{X}_2$=.113	t=9.63**	SUPPORTED

TABLE XV (cont.)

Hypotheses Dealing with General Alcohol Usage

Alternative Hypothesis	Mean	Test Statistic	Conclusion
81. A significantly greater % of married men in their 30's without children(1) encounter job problems than other married men(2).	$\bar{X}_1$=.240 $\bar{X}_2$=.113	t=3.58**	SUPPORTED
82. A significantly smaller % of married men over 30 with children(1) engage in heavy drinking than other men(2).	$\bar{X}_1$=.172 $\bar{X}_2$=.223	t=4.49**	SUPPORTED
83. Dry regions(1) have a significantly smaller % of persons who engage in heavy drinking than wet regions(2).	$\bar{X}_1$=.160 $\bar{X}_2$=.144	t=-1.86	
84. Dry regions(1) have a significantly greater % of persons who encounter police problems than wet regions (2).	$\bar{X}_1$=.012 $\bar{X}_2$=.018	t=-2.12	
85. Wet regions(1) have a significantly smaller % of persons who engage in binge drinking than dry regions(2).	$\bar{X}_1$=.012 $\bar{X}_2$=.014	t=.90	
86. Wet regions(1) have a significantly smaller % of persons who encounter job problems than dry regions(2).	$\bar{X}_1$=.127 $\bar{X}_2$=.127	t=-.07	
87. Wet regions(1) have a significantly larger % of individuals with health problems than dry regions(2).	$\bar{X}_1$=.036 $\bar{X}_2$=.039	t=-.82	

TABLE XV (cont.)

Hypotheses Dealing with General Alcohol Usage

Alternative Hypothesis	Mean	Test Statistic	Conclusion
88. Individuals from wet regions(1) exhibit significantly higher psychological dependence on alcohol than individuals from dry regions(2).	$\bar{X}_1$=8.14 $\bar{X}_2$=8.52	t=-5.23	
89. Low socioeconomic status individuals(1) experience significantly more serious consequences of drinking than high socioeconomic status individuals(2).	$\bar{X}_1$=.270[b] $\bar{X}_2$=.142[b]	t=1.29	
90. High socioeconomic status females(1) drink with significantly more frequency than low socioeconomic status females(2).	$\bar{X}_1$=.194[c] $\bar{X}_2$=.148[c]	t=1.68*	SUPPORTED
91. Civilians in grades 1-7 (1) experience significantly more serious consequences of drinking than civilians of other grades(2).	$\bar{X}_1$=.178[b] $\bar{X}_2$=.119[b]	t=3.64**	SUPPORTED
92. A significantly greater % of civilians in grades 1-5(1) receive lower performance ratings because of drinking than civilians in other grades(2).	$\bar{X}_1$=.010 $\bar{X}_2$=.009	t=.57	

TABLE XV (cont.)

Hypotheses Dealing with General Alcohol Usage

Alternative Hypothesis	Mean	Test Statistic	Conclusion
93. A significantly larger % of civilians in grades 1-5(1) have been told by their supervisors to cut down on their drinking than civilians in other grades(2).	$\bar{X}_1$=.023 $\bar{X}_2$=.017	t=1.46	
94. Males(1) consume alcohol more frequently than females(2).	$\bar{X}_1$=.338[c] $\bar{X}_2$=.105[c]	t=13.7**	SUPPORTED
95. Males(1) consume significantly more alcohol than females(2).	$\bar{X}_1$=.768[a] $\bar{X}_2$=.240[a]	t=14.4**	SUPPORTED
96. A significantly greater % of men(1) volunteer for treatment of an alcohol problem than women(2).	$\bar{X}_1$=.076 $\bar{X}_2$=.054	t=3.64**	SUPPORTED
97. Alcohol consumption level(VT) is positively related to the number of serious consequences experienced.		r=.434**	SUPPORTED
98. Alcohol consumption level(VT) is positively related to age.		r=-.048	
99. The number of serious consequences is negatively related to age.		r=-.060**	SUPPORTED

TABLE XV (cont.)

Hypotheses Dealing with General Alcohol Usage

Alternative Hypothesis	Mean	Test Statistic	Conclusion
100. There are significant differences in the % of women drinkers among the various work functions.	See Footnote[e]	F=1.93**	SUPPORTED

* $p<.05$

** $p<.01$

[a] $_{VT}$

[b] Number of consequences per individual

[c] Percentage of days in which alcoholic beverages are consumed

[d] $_{INTOX}$

[e] See Appendix D, Table XXIX for mean values.

As was the case with the other hypothesis categories, certain test results supported exactly opposite alternative hypotheses. For example: women in their 30's and 40's suffer significantly less serious consequences of drinking than women of other ages (Hypothesis #62); a significantly smaller percentage of young male adults experience health/injury problems than men of other ages (Hypothesis #70); dry regions have a significantly larger percentage of persons who engage in heavy drinking than wet regions (Hypothesis #83); wet regions have a significantly larger percentage of persons who encounter police problems than dry regions (Hypothesis #84); individuals from dry regions exhibit significantly higher psychological dependence on alcohol than individuals from wet regions (Hypothesis #88); and, alcohol consumption is negatively related to age (Hypothesis #98).

4. Hypotheses Dealing with Subjects Not Associated With Alcohol Consumption. In this series of tests, a number of topics are addressed, but none deal directly with alcohol consumption, alcohol misuse, or alcohol related behavior. The results, depicted in Table XVI, are straightforward and need no further clarification or discussion.

5. Hypotheses Test Results as Evidence of Validity. Testing for group differences on a construct is a widely accepted means of providing evidence of its validity (Cronbach and Meehl, 1955:287). With that idea in mind, the results of some of the hypothesis tests just described can be used

TABLE XVI

Hypotheses Dealing with Subjects Not Associated with Alcohol Consumption

Alternative Hypothesis	Mean	Test Statistic	Conclusion
101. A significantly greater % of men's wives(1) than women's husbands (2) threaten to leave for reasons other than drinking.	$\bar{X}_1$=.059 $\bar{X}_2$=.046	t=2.65**	SUPPORTED
102. A significantly greater % of men's wives(1) than women's husbands (2) left for reasons other than drinking.	$\bar{X}_1$=.027 $\bar{X}_2$=.025	t=.37	
103. A significantly larger % of men(1) than women (2) engage in fights unrelated to drinking.	$\bar{X}_1$=.021 $\bar{X}_2$=.017	t=1.38	
104. A significantly greater % of the young (<25 yrs old)(1) get arrested for incidents unrelated to alcohol than the old(2).	$\bar{X}_1$=.035 $\bar{X}_2$=.012	t=2.73**	SUPPORTED
105. A significantly greater % of low socioeconomic men(1) engage in fights unrelated to drinking than high socioeconomic status men(2).	$\bar{X}_1$=.038 $\bar{X}_2$=.021	t=.56	
106. Job satisfaction levels are negatively related to tension/stress levels.		r=-.292**	SUPPORTED
107. Work involvement scores are negatively related to stress levels.		r=-.143**	SUPPORTED

TABLE XVI (cont.)

Hypotheses Dealing with Subjects Not Associated with Alcohol Consumption

Alternative Hypothesis	Mean	Test Statistic	Conclusion
108. Job satisfaction levels and grade levels are positively related.		r=.093**	SUPPORTED
109. Job satisfaction and work involvement levels are positively related.		r=.482**	SUPPORTED
110. Stress and grade levels are positively related.		r=-.037	

* $p<.05$

** $p<.01$

as evidence of the construct validity of the measures used for determining alcohol addiction and adverse affects.

Of 35 alternative hypotheses dealing with alcohol addiction, 16 were not supported. However, of those 16, nine were in the hypothesized direction but not to a significant degree. In addition, 13 of the 16 hypotheses not supported were derived from clinical research. There is some question as to the appropriateness of testing hypotheses obtained from clinical studies in a epidemiological research effort. This fact is discussed in greater detail in Chapter IV.

Of 20 hypotheses dealing with persons adversely affected by alcohol, only three were not supported. All three were also in the hypothesized direction, but, again, not to a significant degree.

D. Use of AID to Find Homogeneous Groups

The next step in the analysis sequence was to use Automatic Interaction Detection(AID) analysis to derive homogeneous groups around four criterion variables: alcohol addicts, persons adversely affected by alcohol, problem drinkers, and alcoholic consumption level(VT). The decision to include VT in this analysis was based primarily on the fact that it has the highest degree of association of any variable with problem drinkers (r=.435). In addition, there is also evidence to conclude that alcohol consumption increases as one proceeds from less to more severe forms of alcohol misuse (See Problem Drinker Categorization and Examination,

p. 59). As a result, the author felt VT deserved more detailed investigation.

The demographic variables and composite measures used as predictors in AID runs are depicted in Appendix E, Table XXX. Three separate runs were made on each criterion variable. The first run had only demographic variables as predictors. The second used both demographic and composite measures. The third run was identical with the second except that PSYDEP was not included as a predictor, in the hopes that some variables overshadowed by PSYDEP's predictive power would emerge.

As stated previously, groups developed by AID are homogeneous in the sense that individuals within a given group share a common criterion score. In the case of VT groups, the score represents a mean alcohol consumption level. In the case of groups derived from problem drinking categories, it represents the probability of being within a particular problem drinking category, given membership in a particular group.

With criteria of a minimum group size of 40 and up to 20 splits, each AID run produced a large number of groups with a wide range of criterion scores. Within the tables to follow are listed only those groups with relatively extreme high and low criterion scores. It was felt these groups provide the most insight into a particular criterion. The reader who is interested in a more complete description

of AID results is referred to Appendix E, Figures E.1-E.8 in which the trees from two of the three AID runs for each criterion variable are depicted. Readers are cautioned not to attempt to find a one-to-one correspondence in every instance between groups depicted in Tables XVII-XX of this chapter and those portrayed in Figures E.1-E.8 of Appendix E. In the first place, AID trees produced from runs in which PSYDEP is not a predictor are not included in Appendix E, and some of the groups in the accompanying tables come from this series of runs. In addition, it was sometimes necessary to go to the fifth level of splits in order to obtain the groups in Tables XVII-XX, whereas, the AID trees in Appendix E are only portrayed through the fourth series of splits.

In describing homogeneous groups, a problem arose as to the best method of portraying a split on a composite measure. Characterizing a group as having job satisfaction scores of less than 16 would have no special significance to most readers of this research study. Therefore, adjective descriptors were assigned to ranges of scores based on the mean and standard deviation of each composite measure. More specifically, scores within one standard deviation of the mean of a composite measure were termed "moderate" while those scores greater and less than one standard deviation from the mean were termed "high" and "low" respectively. The results of this scaling endeavor are depicted in Appendix E, Table XXXI.

1. Groups with Alcohol Addiction as Criterion. Groups of individuals formed by AID with alcohol addiction as the criterion are depicted in Table XVII. These groups with conditional probabilities greater than .18 were termed "high risk of alcohol addiction," while those with probabilities less than .005 were termed "low risk of alcohol addiction."

In general, demographics alone were not very useful in delineating high risk groups. In fact, the highest conditional probability of a group using only demographics was .13 (See Appendix E, Figure E.1). The fact that job satisfaction, psychological dependence on alcohol and stress scores were discriminators between high and low risk groups reaffirms earlier analysis results. The emergence of organizational trust as a discriminator has some special ramifications which are discussed further in Chapter IV.

Several other variables proved to have some predictive power, but do not show up within the groups described in Table XVII (See also Appendix E, Figures E.1 and E.2). These included active federal service time, sex and age. The analysis also uncovered a couple of possible interaction terms, including combinations of job satisfaction and psychological dependence on alcohol scores, job satisfaction and organizational trust scores, and job satisfaction and stress scores. No discernable curvilinear relationships were uncovered.

TABLE XVII

Groups Formed with Alcohol Addiction as Criterion
(N=9927; Probability=.01)

Group	Description	Conditional Probability*	Group Size(n)
A.	High Risk of Alcohol Addiction		
1	A high degree of psychological dependence on alcohol and a low degree of job satisfaction.	.36	66
2	A low degree of job satisfaction and a low degree of trust in AF policy concerning alcoholism.	.28	58
3	A low degree of psychological dependence on alcohol, a moderate to high degree of job satisfaction, and less than high school education, who feel a moderate to high degree of stress and who have little trust in AF policy concerning alcoholism.	.21	42
4	A low degree of job satisfaction, a moderate to high degree of trust in AF policy concerning alcoholism who feel a high degree of stress and have less than 5 years of active federal service.	.20	51
5	A high degree of psychological dependence on alcohol, a moderate to high degree of job satisfaction who either had never been married or were divorced or widowed.	.19	57

TABLE XVII (cont.)

Groups Formed with Alcohol Addiction as Criterion
(N=9927; Probability=.01)

Group	Description	Conditional Probability*	Group Size(n)
B.	Low Risk of Alcohol Addiction		
6	A low degree of psychological dependence on alcohol, a moderate to high degree of job satisfaction and a high school or better education.	<.005	9275
7	A moderate to high degree of job satisfaction and work involvement, who feel a low to moderate degree of stress, have a high school education or better, and who are not Black in racial background.	<.005	7876
8	Hispanics, Orientals or Caucasians with more than 6 years active federal service and a high school or better education.	<.005	6510
9	Non-Hispanics, with less than 5 years active federal service, a high school or better education who are either married or never have been married, and who have two or less dependents.	<.005	1027

* Probability of being an alcohol addict, given membership within the group.

2. Groups with Adverse Affects of Alcohol as Criterion. Table XVIII depicts groups of individuals formed by AID with adverse affects of alcohol as the criterion. Again, groups with conditional probabilities greater than .27 are categorized as "high risk of adverse affects," while those with conditional probabilities less than .02 are termed "low risk."

The great importance of the psychological dependence on alcohol measure as a discriminator of adverse affects is the most obvious impression one gets from reading Table XVIII. It is present in almost everyone of the groups described. Pay scale (blue collar versus white collar worker) also plays an important role as does youth and race. It is surprising that sex did not show up as a discriminating factor. However, since more females are white collar employees, the correlation of sex and pay scale may have masked its effects.

Again, there were some variables with some predictive power which did not show up with the groups depicted in Table XVIII (See also Appendix E, Figures E.3 and E.4). These include geographic region, organizational trust, educational level, number of dependents and total active federal service. Possible interaction terms disclosed were: age and work involvement; age and stress; and age and psychological dependence on alcohol. No curvilinear relationships were uncovered.

3. Groups with Problem Drinking as Criterion. Groups formed with problem drinking as the criterion variable are

TABLE XVIII

Groups with Adverse Affects of Alcohol as Criterion
(N=9805; Probability=.06)

Group	Description	Conditional Probability*	Group Size(n)
A.	High Risk of Adverse Affects		
1	Individuals, 31 years of age or younger with a high degree of psychological dependence on alcohol.	.35	234
2	Blue collar workers, 31 years of age or less, with little work involvement.	.50	48
3	Blue collar workers who are Black, Oriental, or American Indians, experience little stress, and have a low degree of psychological dependence on alcohol.	.49	57
4	Blacks, Orientals or American Indians, 32 years of age or older, with a high degree of psychological dependence on alcohol.	.36	116
5	Blue collar workers, less than 32 years of age, with over seven years active federal service and who are members of a racial minority.	.35	117
6	Hispanics or Whites, less than 32 years of age, with a high degree of psychological dependence on alcohol.	.28	98

TABLE XVIII (cont.)

Groups with Adverse Affects of Alcohol as Criterion
(N=9805; Probability=.06)

Group	Description	Conditional Probability*	Group Size(n)
B.	Low Risk of Adverse Affects		
7	White collar workers, married or widowed, who are Oriental or Caucasian, experience little stress and who did not have parents who drank heavily.	<.005	997
8	White collar workers with little or no psychological dependence on alcohol.	.01	3880
9	White collar female workers, married or widowed, who did not have parents who drank heavily.	.01	472
10	Blue collar workers, with no psychological dependence on alcohol and a moderate to high degree of trust in AF policy toward alcoholism.	.01	1515

* Probability of being adversely affected by alcohol, given membership within the group.

depicted in Table XIX. As with other groups, those with probabilities greater than .49 are termed "high risk," while those with probabilities less than .02 are termed "low risk."

Again, psychological dependence on alcohol emerges as the most powerful discriminator between high and low risk groups. Age, sex, pay scale, job satisfaction, work involvement and marital status also play important roles. In fact, almost all the discriminators found within both the alcohol addict and adverse affects groups are present, although in different order and in different combinations.

Total active federal service, time on station, and stress all proved to have some predictive power, but were not factors in the groups listed in the table (See also Appendix E, Figures E.5 and E.6). Possible interaction terms uncovered include: age and work involvement; age and stress; psychological dependence and job satisfaciion; and psychological dependence and age. Again, no curvilinear relationships emerged.

4. Groups with Alcoholic Consumption(VT) as Criterion. Depicted in Table XX are groups formed with alcohol consumption levels(VT) as the criterion variable. Groups with VT scores greater than 2.0 are labeled as "heavy alcohol consumers," while those with scores less than .30 are labeled as "light alcohol consumers." For ease in understanding, readers should be aware that one ounce of ethanol is roughly

TABLE XIX

Groups with Problem Drinking as Criterion
(N=9805; Probability=.07)

Group	Description	Conditional Probability*	Group Size(n)
A.	High Risk of Problem Drinking		
1	Individuals with a high degree of psychological dependence on alcohol and a low degree of job satisfaction.	.69	61
2	Individuals with a high degree of psychological dependence on alcohol, a moderate to high degree of job satisfaction who are less than 32 years of age.	.65	46
3	Black or American Indian blue collar workers who feel little stress and who have a low degree of psychological dependence on alcohol.	.59	46
4	Blue collar workers, less than 32 years old with little involvement in their work.	.56	48
5	Wage Leaders or Wage Supervisors less than 32 years of age.	.50	42

TABLE XIX (cont.)

Groups with Problem Drinking as Criterion
(N=9805; Probability=.07)

Group	Description	Conditional Probability*	Group Size(n)
B.	Low Risk of Problem Drinking		
6	Married or widowed female white collar workers.	.01	2165
7	Married or widowed white collar workers with a moderate to high degree of involvement with their work and who did not have parent(s) who drank heavily.	.01	2367
8	White collar workers with little or no psychological dependence on alcohol.	.01	3880
9	Blue collar workers with at least a little trust in AF policy toward alcoholism and no psychological dependence on alcohol.	.02	1685
10	Married or widowed female blue collar workers with low degree of work involvement.	.02	693

* Probability of being a problem drinker, given membership in the group.

TABLE XX

Groups with Alcohol Consumption Level(VT) as Criterion
(N=9927; VT*=.517)

Group	Description	VT*	Group Size(n)
A.	Heavy Alcohol Consumers		
1	WG and WL employees with a high degree of psychological dependence on alcohol.	5.45 oz	73
2	Males, currently not married, who have 4 or more dependents.	3.65 oz	51
3	Males, who experience a high degree of stress.	3.57 oz	46
4	Black, Hispanic or American Indian males with a high degree of psychological dependence on alcohol and less than 7 years active federal service.	3.08 oz	57
5	Oriental or White males with a high degree of psychological dependence on alcohol who are either widowed, divorced or legally separated.	2.34 oz	65
6	Males who are currently not married, experience at least some stress, had parent(s) who drank heavily and who have a high school or less education.	2.09 oz	96
7	Male WG or WL employees, currently not married who had parent(s) who drank heavily.	2.01 oz	111

TABLE XX (cont.)

Groups with Alcohol Consumption Level(VT) as Criterion
(N=9927; VT*=.517)

Group	Description	VT*	Group Size(n)
B.	Light Alcohol Consumers		
8	Females with no psychological dependence on alcohol and at least some high school education.	.074 oz	1810
9	Males with no psychological dependence on alcohol and at least some high school education.	.198 oz	2698
10	Females with moderate to high job satisfaction who experience a low to moderate degree of stress.	.232 oz	3200
11	Female white collar workers.	.235 oz	3107

* Measured in ounces of ethanol per day.

equivalent to two 12 ounce cans of beer, two 8 ounce glasses of wine, or two mixed drinks.

Again, psychological dependence on alcohol emerges as powerful a predictor of alcohol consumption as it was of problem drinking categories. What is more surprising is the strong role that sex plays in determining VT levels. It is much more significant here than in discriminating between high and low risk problem drinking categories. Educational level also had impact in forming this particular set of groups as did stress, pay scale, marital status, race and parental heavy drinkers.

Variables with some predictive power not included within the groups depicted in Table XX include organization trust, age and work involvement (See also Appendix E, Figures E.7 and E.8). Possible interaction terms uncovered are: job satisfaction and stress; work involvement and stress; and psychological dependence on alcohol and stress. Again, no discernable curvilinear relationships emerged.

E. Regression/Discriminant Analysis of Data

The purpose of either regression or discriminant analysis as a model seeking technique is basically the same: to build a function from a number of designated independent variables which explains the most amount of variance in a given dependent variable. In this instance, discriminant analysis is used to build functions which maximally discriminate between the three problem drinking categories (alcohol

addicts, adverse affects, and problem drinkers) and their non-problem drinking counterparts. Regression analysis, on the other hand, is used to build a model which will predict alcohol consumption levels(VT).

1. Discriminant Analysis. SPSS program DISCRIMINANT (Nie, et al., 1975) was used to develop functions which would discriminate between problem drinking categories and their non-problem drinking counterparts. In order to improve this program's discriminating capabilities, the entire data base was not used, but rather three separate data subfiles. Each subfile consisted of all of the cases classified as members of a particular problem drinking category and an equal number of randomly selected cases not so classified. For example, the file on which discriminant analysis of alcohol addicts was performed consisted of some 110 alcohol addicts and 110 non-alcohol addicts.

The stepwise selection procedure was used for entering variables into the discriminant function. Variables were selected on the basis of their capability to maximize the Mahalanobis distance between the two categories. An F-value of 4.0 was specified for a variable to enter or leave the discriminant function.

The "dummy variable" technique (McNichols, 1978:4-30) was used to convert nominal scaled variables used as discriminators into one or more dichotomous variables, the values of which were obtained from AID splits. Also included

as possible discriminating variables were any interaction terms uncovered by AID analysis. Appendix F, Tables XXXII-XXXV provide lists of those independent variables used in the discriminant analysis of alcohol addicts, persons adversely affected by alcohol, and problem drinkers, respectively.

One measure of the power of discriminant results is the ability of classification functions derived during the course of the analysis to assign a case with "unknown" category membership to the proper category. Since actual category membership for each case is known, the classifying source of the functions can be determined. In order not to upwardly bias the results, each file was randomly partitioned into two equal parts. One part was used to build the functions; the other part was then used to determine the classifying capability. In all three cases, this partitioning process resulted in both parts having essentially identical numbers of the problem drinking category and its non-problem drinking counterpart. As a result, it was not necessary to use the PRIORS specification to adjust for a priori knowledge of group membership probabilities (Nie, et al., 1970:445). The percentage of respondents correctly classified provides a cross-validation of the multiple discriminant results.

a. Alcohol Addict Analysis. The results of discriminant analysis with alcohol addiction as the criterion variable are depicted in Table XXI. Part I of the table

TABLE XXI

Discriminant Analysis with Alcohol Addiction as Criterion

I. The Discriminant Function (n=108)

Variable[a]	Step Entered	Standardized Coefficient
PSYDEP	1	.863
I3[b]	2	-.550
Pay Scale(P1)[b]	3	-.619
Marital Status(M4)[b]	4	-.438
WORTH	5	-.407

Eigenvalue	Canonical Correlation(CC)	$(CC)^2$
.882	.685	.469

II. Classification Results (n=111)

	Predicted Group Membership	
Actual Group	Non-Alcohol Addicts	Alcohol Addicts
Non-Alcohol Addict	72.1%	27.9%
Alcohol Addict	34.0%	66.0%

69.4% of known cases correctly classified

X^2=16.7 Significance=.000

[a]All variables were significant at the .001 level.

[b]See Appendix F, Table XXXII for a full description of dummy variables and interaction terms.

provides information on the resultant discriminant function while Part II presents the result of attempts to classify those cases not used in forming the discriminant function.

Part I portrays the five variable discriminant functions. As indicated by its standardized coefficient, psychological dependence on alcohol had the most discriminating power, followed by pay scale and a job satisfaction/organizational trust interaction term. Pay scale split on blue collar(WG, WL and WS) workers versus white collar (GS) workers. Marital status split on divorced versus all other categories.

The discriminant function was statistically significant. The square of the canonical correlation [$(CC)^2$], interpretable as the percent of variance in the discriminant function explained by the two categories is a further measure of the functions merit.

As shown in Part II, the classification functions were able to correctly classify 69.4% of the known cases, again a statistically significant percentage. From this table, it is evident that the functions are somewhat better at predicting non-alcohol than alcohol addicts.

Probably the biggest surprise to come out of this particular analysis sequence was the emergence of pay scale as a powerful discriminator of alcohol addicts, something not evident from AID analysis. A review however, indicates that it was frequently overshadowed by other variables and often turned up as second best when a split was to be made.

b. Adverse Affects Analysis. Table XXII depicts the results of discriminant analysis with persons adversely affected by alcohol as the criterion. Seven variables are included in the discriminant function.

Again, psychological dependence on alcohol has the most discriminating power, followed closely by marital status and sex. These three, in turn are followed by an age/work involvement interaction term, race, parental heavy drinkers, and finally, educational level, all of which have less than half the discriminating power of psychological dependence on alcohol. Marital status split on married and widowed versus never having been married, divorced, and legally separated. Race split on minority (Blacks, Hispanics, Orientals, and American Indians) versus non-minority membership.

The discriminant function was statistically significant. Approximately 32.6% of the variance within the function could be explained by the two categories. The classification functions were able to correctly classify 74.5% of the known cases, a very good percentage. The functions were also able to predict persons adversely affected by alcohol and those not so affected with an approximate equal success.

The results of this analysis generally confirms previous results. It is interesting to note that parental heavy drinkers showed up as a powerful discriminator of persons adversely affected by alcohol and not alcohol addicts. In addition, it is somewhat surprising that pay scale did

TABLE XXII

Discriminant Analysis with Adverse Affects as Criterion

I. The Discriminant Function (n=509)

Variable[a]	Step Entered	Standardized Coefficient
PSYDEP	1	-.663
Marital Status(M1)[b]	2	.501
Sex	3	-.504
Race(R4)[b]	4	.280
I1[b]	5	.317
Parental Heavy Drinkers	6	-.192
Education Level	7	.185

Eigenvalue	Canonical Correlation(CC)	$(CC)^2$
.483	.571	.326

II. Classification Results (n=510)

	Predicted Group Membership	
Actual Group	Not Adversely Affected	Adversely Affected
Not Adversely Affected	75.7%	24.3%
Adversely Affected	26.7%	73.3%

74.5% of known cases correctly classified

X^2=122.5 Significance=.000

[a]All variables were significant at the .001 level.

[b]See Appendix F, Table XXXIII for a full description of dummy variables and interaction terms.

not show up within the function as it was fairly prominent in AID analysis results.

c. Problem Drinker Analysis. Table XXIII depicts the results of discriminant analysis with problem drinkers as the criterion variable. All total, eight variables were included in the discriminant function. As in the previous two analyses, psychological dependence on alcohol is by far the most powerful discriminator of problem drinkers, being more than twice as powerful as any of the other seven variables. Pay scale split again on blue collar versus white collar workers. Likewise, marital status again split on married and widowed versus all other categories. Finally, as was the case for persons adversely affected by alcohol, race split on minority versus non-minority membership.

The discriminant function was statistically significant and 39.8% of its variance could be explained by the two categories of problem and non-problem drinkers. The classification functions were able to correctly classify 76.9% of the known cases, again a very good percentage. The functions were also equally successful in predicting both problem drinker and non-problem drinker membership.

Since problem drinkers are merely the combination of alcohol addicts and those adversely affected by alcohol, it was expected that the problem drinker discriminant function would be made up of a combination of the variables which proved to be powerful discriminators of the other two

TABLE XXIII

Discriminant Analysis with Problem Drinkers as Criterion

I. The Discriminant Function (n=636)

Variable[a]	Step Entered	Standardized Coefficient
PSYDEP	1	-.883
Pay Scale(P3)[b]	2	.387
Marital Status(M1)[b]	3	.334
Race(R4)[b]	4	.290
TAFS	5	.248
Parental Heavy Drinkers	6	-.205
Sex	7	-.191
TRUST	8	.147

Eigenvalue	Canonical Correlation(CC)	$(CC)^2$
.664	.632	.399

II. Classification Results (n=633)

	Predicted Group Membership	
Actual Group	Non-Problem Drinker	Problem Drinker
Non-Problem Drinker	78.8%	21.1%
Problem Drinker	24.9%	75.1%

76.9% of known cases correctly classified

X^2=183.7 Significance=.000

[a]All variables were significant at the .001 level.

[b]See Appendix F, Table XXXIV for a full description of dummy variables and interaction terms.

categories. It is interesting to note that demographic variables play a somewhat more prominent overall role in discriminating problem drinkers than they played in discriminating alcohol addicts or persons adversely affected by alcohol.

2. Regression Analysis. SPSS program REGRESSION (Nie, et al., 1975) was used to seek a model which would most accurately predict alcohol consumption level(VT). In this instance, the entire data base was employed in constructing the model.

Variables used as predictors during the regression analysis of VT are listed in Appendix F, Table XXXV. As was the case in discriminant analysis, nominally scaled variables were converted into dichotomous variables and several possible interaction terms were included.

The stepwise selection procedure was used for entering variables into the model. F-in and F-out values were set at 4.0 and 3.8 respectively. Based on these criteria, a model consisting of 15 variables was developed. It was then decided to reduce the model to those variables which represented an R^2 change of .002 or better. This resulted in a model with 10 variables as depicted in Table XXIV.

As evidenced by the standardized regression coefficients, all of the variables have approximately the same predictive power, except for psychological dependence on alcohol and race which have over twice the predictive power

TABLE XXIV

Regression Analysis with VT as Criterion

The Linear Regression Model

Variable[a]	Step Entered	Standardized Coefficient
PSYDEP	1	.376
Pay Scale(P1)[b]	2	-.066
Marital Status(M4)[b]	3	-.087
I3[b]	4	-.071
Supervisory Status	5	-.065
WORTH	6	-.062
Race(R1)[b]	7	-.216
# of Dependents	8	.056
Parental Heavy Drinkers	9	.052
Sex	10	.058

Multiple R^2	Adjusted R^2	F-Value
.202	.197	157.0

[a]All variables were significant at the .001 level.

[b]See Appendix F, Table XXXV for a full description of dummy variables and interaction terms.

of the other variables. The interaction term in the model is one consisting of the crossproduct of psychological dependence on alcohol and stress scores. Marital status split on married versus not currently married. Race split on Orientals and Whites versus Blacks, Hispanics and American Indians, while pay scale split on blue collar versus white collar workers.

As evidenced by the F-value, the overall model is highly significant. R^2, often called the coefficient of determination, is another measure of the goodness of fit of the data to the model.

F. Problem Drinking Profiles

The final step in the analysis process was to construct a profile for each of the three problem drinking categories; alcohol addicts, persons adversely affected by alcohol, and problem drinkers. All of the previously reported analyses were reviewed in deriving those characteristics included within each profile. No attempt was made to include each and every variable which emerged sometime during the previous analysis efforts; rather, profiles were limited in scope to those variables which made significant contributions toward a better understanding of a particular problem drinking category. Readers are cautioned not to attach any statistical significance to the profiles.

1. Alcohol Addicts. Alcohol addicts are predominately males and blue collar workers. It is likely that they are

currently divorced. They exhibit a high degree of psychological dependence on alcohol and a low degree of job satisfaction. Alcohol addicts display little involvement with their work and are highly distrustful of stated Air Force policy toward treatment and rehabilitation of alcoholics.

2. Persons Adversely Affected by Alcohol. Persons adversely affected by alcohol are largely males and tend to be less than 32 years of age. More likely than not they are members of a racial minority and are currently not married or widowed. They exhibit a moderate to high degree of psychological dependence on alcohol and show little involvement with their work. Persons adversely affected by alcohol may have had a parent who drank heavily and are generally less educated than persons not so affected.

3. Problem Drinkers. Problem drinkers are predominately males and blue collar workers. Most likely, they have never been married or are divorced or separated. They are probably members of a racial minority group, had a parent who drank heavily and have less total active federal service than their non-problem drinker counterparts. Problem drinkers exhibit some degree of psychological dependence on alcohol and are distrustful of stated Air Force policy toward treatment and rehabilitation of alcoholics.

G. Summary

As the first step in the analysis process, the percentages of individuals within the problem drinking categories

were computed and a number of comparisons between mean variable values for the categories were made. Then, some 110 different hypotheses coupling this data with previous research were tested. AID analysis was then used to develop homogeneous groups with problem drinking categories and VT as criterion variables. Regression/Discriminant analysis was then used to build functions which could discriminate between problem drinking categories and predict VT levels. Finally, based on the result of all the analyses just described, profiles were developed for each problem drinking category.

In the concluding chapter to this thesis, a brief summary of everything up to this point is made, followed by some general conclusions drawn from results in this chapter, a discussion of the major benefits derived from this study, and some recommendations for improvements in future research efforts.

IV. Summary and Conclusions

A. Summary

As the name of this thesis implies, its purpose is to examine the extent of alcohol misuse among U.S. Air Force civilian employees. The objectives are twofold: (1) determine the magnitude of alcohol misuse among USAF civilian employees; and (2) use hypothesis testing and model seeking techniques to identify variables which will aid in identifying alcohol misusers.

1. Methodology. Data for this research effort were gathered from a random sample of civilian employees. The data base was weighted by grade to reflect the characteristics of the population as a whole and examined for unreliable data.

From the survey instrument, a large number of variables were derived, including frequency measures of alcohol consumption and days missed from work due to drinking. A number of composite measures including job satisfaction, work involvement and psychological dependence on alcohol were also developed, in the hopes that they might prove useful as predictors of alcohol misuse. Each of these measures was factor analyzed and checked for reliability.

Criteria for defining the three problem drinking categories (alcohol addicts, persons adversely affected by alcohol, and problem drinkers) were analyzed and discussed in

terms of their relationship to previous alcohol research.

An analysis sequence was derived starting with the determination of the percentages of persons falling within each problem drinking category. Then a number of hypotheses were tested comparing this research effort with results from prior research.

Next, AID analysis derived homogeneous groups with problem drinking categories and VT as the criterion measures. Discriminant analysis built functions which discriminated between problem drinking categories and regression analysis built a model which could predict alcohol consumption. Results of the entire analysis sequence were reexamined and profiles of the problem drinking categories developed.

2. Results. Alcohol addicts, persons adversely affected by alcohol and problem drinkers turned out to represent 1.1, 5.9 and 7.0 percent of the total civilian employee population respectively. A comparison of statistics indicated there are differences among the categories in terms of a number of variables including alcohol consumption, days missed from work due to drinking, some demographic variables and several of the composite measures.

A total of 110 hypotheses were tested with 65 being supported. Some trends did develop during hypothesis testing which are discussed later within this chapter. Hypothesis testing, along with AID and Discriminant analysis did turn up some variables with the ability to discriminate

between problem drinking categories and their non-problem drinking counterparts. Chief among these variables was psychological dependence on alcohol, a powerful discriminator of all three groups. Other variables included job satisfaction and work involvement, stress and organizational trust, race, sex, marital status, and pay scale. Many of these same variables also emerged as powerful predictors of alcohol consumption levels, with psychological dependence on alcohol again leading the pack.

B. Conclusions

The results of testing hypotheses derived from clinical research studies were poor at best. In fact, of 20 such hypotheses, 13 were not supported. There are two factors which probably account for most of these results. First, the assumption was made that all persons receiving clinical treatment for an alcohol related problem would classify as alcohol addicts. There is evidence to indicate that some clinical patients exhibit a broader range of alcohol problems (Horn, Wanberg, and Adams, 1971; Mulford, 1977). Second, there is some serious disagreement as to whether characteristic trends taken from clinical studies can be generalized to an entire population. As Cahalan points out, these findings are based on data collected from unscientific samplings and "it is impossible to determine whether the characteristics of the patient are connected primarily to this drinking or the fact that he is institutionalized and thus coming

from the poor, the unemployed, and the incompetent" (Cahalan, 1970:14).

It was also evident during hypotheses testing and other phases of the analysis sequence that socioeconomic status was not proving to be a good predictor of alcohol misuse or consumption. This was somewhat surprising in that both clinicians and epidemiologists reported a definite relationship between it and various alcohol related problems (See Background, Chapter I, pgs. 2-6). The primary reason for this lack of a strong relationship probably lies in the makeup of the socioeconomic status variable. It consisted of a combination of salary figures and educational level. Most researchers, when defining socioeconomic status, include some measure of an individual's standing within the social structure of the community (often called an "index of social position") (Cahalan, 1970; Knupfer and Room, 1974). The emergence of pay scale as an important discriminator tends to confirm the importance of social position as a contributor to socioeconomic status.

The percentages of persons addicted to alcohol and adversely affected by alcohol are considerably lower than those reported by Polich and Orvis within the Air Force military community using almost identical categories and criteria. Part of this discrepancy can be traced to differences in the makeup of the two populations. Specifically, the civilian population is older and has many more females

and married persons than the military population (Polich and Orvis, 1978:22). In addition, as mentioned previously, a comparison of responses made to a number of alcohol problem related questions by respondents and by their supervisors indicate that all figures relating to alcohol misuse resulting from this study are underestimates by at least a factor of two (See Validity, Chapter II, p. 49). Apparently Polich and Orvis did not get strong indications of underreporting in their study. Incidently, the results of these comparisons can serve as a yardstick of the extent of underreporting of alcohol problems in an epidemiological survey.

It appears quite evident that alcohol addiction, as a form of alcohol misuse is more damaging to the individual than adverse affects or non-problem drinking. Support for this contention lies in the fact that they consume more alcohol, miss more days from work, drink to intoxication more often and cost the Air Force much more in property damage and productivity losses than individuals from the other two categories. In addition, a larger percentage of alcohol addicts were referred for treatment of alcohol problems than other persons. Characterized by high psychological dependence on alcohol as well as low job satisfaction and work involvement, alcohol addiction would seem to have both behavioral and social impact on the individual. Alcohol addicts appear also to be convinced that knowledge of their condition would be extremely damaging to their careers and are

distrustful of any Air Force claims to the contrary. The fact that more alcohol addicts than any other category would not volunteer for Air Force treatment is taken as further evidence of their unwillingness to admit to a problem publically. Consequently, those problem drinkers most in need of professional treatment are probably the most difficult to identify.

Adverse affects, while not as severe a form of alcohol misuse as alcohol addiction, is still damaging as evidenced by the same figures reported in the previous paragraph. There has been some concern voiced that the criteria for adverse affects are biased in that they tend to pick males rather than females and the young rather than the old (McCully, 1978:94). An examination of hypothesis tests concerning social problems both related and not related to alcohol consumption would tend to confirm the sexual bias. Then again, men outscore women in almost every facet of alcohol consumption and alcohol related problems, including those areas devoid of social consequence. As to the question of youth, the results of a number of hypothesis tests (Hypotheses #36, 49, 59, 60, 61, 63-70) indicate that while age does play a role in determining serious consequences, it is not a predominant one. In fact, a number of other variables, including psychological dependence on alcohol and race have a greater impact in determining the category of adverse affects. There is no conclusive evidence to indicate that

persons adversely affected by alcohol will eventually become addicted to alcohol. However, from the pattern of several statistics just mentioned, including alcohol consumption levels and missed working days, it would seem to be a definite possibility.

Finally, it is interesting to note that many of the same variables that were important in discriminating among problem drinking categories are also important in predicting alcohol consumption levels. This tends to support the contention that increased alcohol consumption and alcohol problems are very closely related.

C. Benefits Derived from This Study

From the standpoint of the Air Force Directorate of Civilian Personnel(DPC), the benefits derived from this study are mostly practical in nature. First, in terms of the percentages within each problem drinking category and in dollar amount of productivity loss and property damage, they have two measures of the extent of alcohol related problems within the Air Force civilian population. Second, some of the characteristics of problem drinkers could give some needed direction to any attempts to curb alcohol misuse. For instance, a program on alcohol awareness might be best directed toward blue versus white collar workers. Finally, there is the knowledge that a clear confirmation of Air Force support for the rehabilitation and treatment of problem drinkers may be necessary before many alcohol addicts will risk stepping

forward and being counted.

To the alcohol researcher, there are also a number of benefits to be gained from this study. First, there is emergence of psychological dependence as a measure of almost any form of alcohol use and misuse. Second, there is a reaffirmation of the association of several variables with alcohol problems, including sex, age, race, marital status and geographic region. Third, there is the association between several previously unreported variables and alcohol problems including job satisfaction and work involvement. Lastly, there is the previously mentioned research into the extent that alcohol involvement is underreported in an epidemiological study.

D. Recommendations for Improvements in Future Research Efforts

If further study is to be undertaken within the Department of Defense or the rest of the federal government on the subject of alcohol misuse, then the author has some suggestions toward improving the overall quality of such a study: (1) Use an interval scaled measure of alcohol misuse. Cahalan's problem drinking scale is probably one of the more practical measures of this type (Cahalan, 1970). Categorical measures of alcohol misuse usually result in rather arbitrary cutting points for inclusion or non-inclusion of individuals, leaving results open to much criticism and debate. (2) Avoid asking too many demographic questions. In this

particular survey so many demographic questions were asked that it is almost possible with a little help from a local civilian personnel office to identify individual respondees, even though the responses were anonymous. This fact may have caused certain individuals, especially those who feared disclosure of an alcohol problem, to avoid filling out the questionnaire. Some of the demographic questions, such as weight, served no real purpose anyway.

(3) Ask questions about other drug usage. This should avoid the possibility of unknown spillover effects from other drug involvement effecting responses to alcohol related behavior.

(4) Develop a better measure of socioeconomic status. This would entail the inclusion of some form of an index of social position and more detailed information about a person's income level.

Bibliography

Cahalan, Don. Problem Drinkers. San Francisco, Ca.: Jassey-Bass Inc., 1970.

Cahalan, Don and Robin Room. Problem Drinking Among American Men. New Haven, Conn: College and University Press, 1974.

Cahalan, Don, et al. American Drinking Practices: A National Survey of Behavior and Attitudes. Monograph No. 6. New Brunswick, New Jersey: Rutgers Center of Alcohol Studies, 1969.

"Califano Cites Need for Continued Research," NIAAA Information and Feature Service, 53: 3-7 (November 1978).

"Civilians Needing Help Seen Increasing," Air Force Times, 27 February 1978, p. 30.

Committee of the American Psychological Association. Standards for Educational and Psychological Tests. Washington, D.C., 1974.

Criteria Committee, National Council on Alcoholism. "Criteria for the Diagnosis of Alcoholism," American Journal of Psychiatry, 129 (2): 127-135 (1972).

Cronbach, Lee J. "Coefficient Alpha and the Internal Structure of Tests," Psychometrika, 12: 297-334 (1946).

Cronbach, Lee J. and Paul E. Meehl. "Construct Validity in Psychological Tests," Psychological Bulletin, 52: 281-302 (1955).

Essig, Carl F. "Alcohol and Related Addicting Drugs," Alcoholism: The Total Treatment, edited by Ronald J. Catanzaro, M.D. London: Charles C. Thomas, 1968.

Farquhar, John. "Stress and How to Cope With It," The Stanford Magazine, 5 (2): 55-75+ (1977).

Gooch, Laurence L. Policy Capturing With Local Models: The Application of the AID Technique in Modeling Judgement. DP Dissertation. Austin, Texas. University of Texas, December 1972.

Guilford, J.P. Psychometric Methods (Second Edition). New York: McGraw-Hill Book Company, 1954.

Hoppock, Robert. Job Satisfaction. New York: Harper and Row, 1935.

Horn, John L., et al. "Diagnosis of Alcoholism: Factors of Drinking, Background and Current Conditions in Alcoholics," Quarterly Journal of Studies on Alcohol, 35: 147-175 (1974).

Jellinek, E.M. The Disease Concept of Alcoholism. New Brunswick, N.J.: Hillhouse, 1960.

McCully, Mary S. Alcohol Misuse: Definitions, Criteria, and Characteristics. MS Thesis. Wright-Patterson AFB, Ohio: Air Force Institute of Technology, December 1978.

McNichols, Charles W. An Introduction To: Applied Multivariate Data Analysis-Course Notes. Unpublished Manuscript. School of Engineering, Air Force Institute of Technology, Wright-Patterson AFB, Ohio, 1978.

McNichols, Charles W., et al. "A Validation of Hoppock's Job Satisfaction Measure," Academy of Management Journal, 737-742 (December 1978).

Manley, T. Roger, et al. Alcoholism and Alcohol-Related Problems Among USAF Civilian Employees: A Preliminary Report. Technical Report 79-3. Wright-Patterson AFB, Ohio: Air Force Institute of Technology, May 1979.

Mulford, Harold A. "Stages in the Alcoholic Process: Toward a Cumulative, Nonsequential Index," Journal of Studies on Alcohol, 39 (3): 563-583 (1977).

Mulford, Harold A. and D.E. Miller. "Drinking in Iowa III. A Scale of Definitions of Alcohol Related to Drinking Behavior," Quarterly Journal of Studies on Alcohol, 21: 267-268 (1960).

Nie, Norman H., et al. Statistical Package for the Social Sciences (Second Edition). New York: McGraw-Hill Book Company, 1975.

Nunnally, Jum C. Psychometric Theory (Second Edition). New York: McGraw-Hill Book Company, 1978.

Patchen, Martin. "Some Questionnaire Measures of Employee Motivation and Morale," Ann Arbor: Institute for Social Research. Monograph 41, 1965.

Plant, M.A., et al. "Observing Public Drinking," Journal of Studies on Alcohol, 38: 867-880 (May 1977).

Polich, Michael J. and Bruce R. Orvis. Prevalance of Alcoholism and Alcohol Abuse in the Air Force (tentative title). Unpublished text. RAND Corporation, Santa, Monica, California (1978).

Randell, G.A. and I. Campbell. "Deviant Responses on Psychological Tests," Occupational Psychology, 47: 177-188 (1973).

Schuckit, M.A. and E. Gunderson. "The Association Between Job Type in the U.S. Navy," Quarterly Journal of Studies on Alcohol, 35: 577-585 (June 1974).

Wanberg, Kenneth W., et al. "A Differential Assessment Model for Alcoholism," Journal of Studies on Alcohol, 38 (3): 512-541 (1977).

APPENDIX A

The Instrument

This appendix includes the cover letter to the survey package, a list of adminstrative instructions on completing the survey and the instrument.

DEPARTMENT OF THE AIR FORCE
HEADQUARTERS UNITED STATES AIR FORCE
WASHINGTON, D.C. 20314

REPLY TO ATTN OF: MPK

SUBJECT: USAF Civilian Employee Alcohol Prevalence Study - USAF SCN 78-117 (HQ USAF/MPK Messages 071500Z Sep 78 and 111300Z Sep 78)

TO:

1. The subject messages provided advance notice concerning the alcohol prevalence survey. The attachment to this letter contains instructions for administration of the questionnaire. Included in the survey packet should be:

a. Sufficient copies of the questionnaire to fulfill the sample requirements for your base.

b. Sufficient answer sheets to fulfill the sample requirements for your base.

c. Address stickers for personnel from your base who were selected to participate in the survey.

d. A summary list of the names of participants from your base.

e. A work sheet for computing response rate.

f. A suggested letter of notification.

2. Air Force Form 1239, Air Force Sample Survey Answer Sheet, is provided in sufficient numbers for the sample from your base. In the event the enclosed number is insufficient, contact the base Survey Control Officer (DPMOA) in the CBPO.

3. Questions concerning this survey may be directed to the following:

a. Mr. Neil F. Galloway, Chief, Employee Relations Division, HQ USAF/MPKE, Autovon 223-5238(9).

AMERICAN REVOLUTION BICENTENNIAL 1776-1976

b. Lt Col Roger Manley, Professor of Management and Organizational Behavior, AFIT/ENS, Autovon 785-3362(2514).

c. Major Charles W. McNichols, Associate Professor of Operations Research, AFIT/ENS, Autovon 785-3362(2549).

d. Captain Michael J. Stahl, Assistant Professor of Management, AFIT/ENS, Autovon 785-3362(2549).

4. Your cooperation in helping us achieve a successful survey is greatly appreciated.

FOR THE CHIEF OF STAFF

J. CRAIG CUMBEY
Director of Civilian Personnel

1 Atch
Administration

ADMINISTRATION

Each participant in the survey research effort should receive a letter of notification containing information detailing the time and place of administration of the survey. The letter should be signed by the Civilian Personnel Officer. A suggested letter of notification is included in the survey packet as are address stickers which can be placed on envelopes containing the letter of notification for delivery through the base mail system. Additionally, the views of officials of local unions having extensive recognition should be soliciated on ways to administer the survey effectively to groups of employees, obtain full employee cooperation, and assure the anonymity of respondents. The active support of these local union officials can be a significant help. The survey has been developed in consultation with and is supported by the national headquarters of the American Federation of Government Employees (AFGE), the National Federation of Federal Employees (NFFE), and the National Association of Government Employees (NAGE). Employees located 25 miles or more from the CCPO should be excused from Administration of the Survey.

A close accounting of the effective response rate to this survey is extremely important. The validity of the results will depend in large part upon the proportion of respondents who receive and complete the questionnaire. Should a significant number receive questionnaires but fail to complete them, the data provided by respondents would be suspect, i.e., it would not be known whether nonrespondents were alcohol abusers or abstainers with the result that serious doubt would be raised concerning how respresentative the sample was of the entire population of USAF civilian employees. Therefore, you are asked to use the response rate work sheet to provide a summary when returning the completed answer sheets. Included in the summary should be the following:

a. Number of respondents actually notified.

b. Number of surveys actually received by prospective respondents.

c. Number of surveys completed.

d. Number of respondents who did not complete survey because of reasons connected with work (e.g., TDY, heavy work load, etc.).

e. Number of respondents who did not complete survey because they were in leave status (e.g., annual, sick, LWOP, AWOL, etc.).

f. Number of surveys not completed because respondents were no longer employed at the location contained on the address stickers.

g. Number of surveys not completed because respondents worked 25 miles or more from the CCPO.

h. Number of employees who failed to complete survey for other reasons.

i. Number of surveys administered in groups.

j. Number of surveys administered through distribution/ mail system.

It is requested that the survey be administered to respondents during their normal work hours and that the Civilian Personnel Officer introduce the survey and emphasize its importance. Mention should be made of the historic significance of this data collection effort; of the fact that it is the first to include federal civilian employees; that it is supported by the national headquarters of AFGE, NFFE, NAGE; and that the data may be used by HQ USAF to improve policy and programs dealing with alcohol.

Participation in the survey is voluntary, and prospective respondents should be informed of that; however, emphasis should be given to the importance of their cooperation with respect to the validity of the research findings. Assure them that their individual responses will be completely anonymous, cannot be identified with any individual, and will be available only to the AFIT researchers. They will be informed of the results of the study through reporting in the various information media. In addition, each MAJCOM/DPC will receive a copy of the final report.

Have each participant in the survey read the purpose and instructions to the questionnaire. Be sure each has an answer sheet and uses a soft pencil (No. 1 or No. 2) to record answers. Do not use a pen of any kind. Have each respondent enter the appropriate three number work station numbers in columns 1 - 3 of the section entitled "NUMERIC GRID" at the right of the answer sheet. A list of work station numbers is provided in the introductory portion of the questionnaire.

Ask the respondents to check their answer sheets at the completion of the survey to ensure that:

a. There is only one response recorded for each question.

b. Erasures are thorough.

c. Responses are properly pencilled in.

d. The three letter work station number was entered in columns 1 - 3 in the NUMERIC GRID SECTION.

It is preferred that completed answer sheets be turned in to the Civilian Personnel Officer representative; however, if they wish, respondents may place the completed answer sheets in large manilla envelopes for mailing directly to the AFIT researchers. Respondents may retain the questionnaire if they wish.

Mail completed answer sheets via first class mail by 4 November 1978 to:

AFIT/ENS (Survey)
Wright-Patterson AFB, OH 45433

a. Stack answer sheets so that all face the same way. Do not staple, clip, or otherwise fasten the answer sheets in any way since the slightest mutilation will cause them to be rejected by the optical scanner. In this connection, please be certain that answer sheets are securely packaged so as to preclude damage in shipment.

b. Please include in the packet the completed response rate work sheet.

Upon completion of the survey, destroy the list of names of employees selected for participation in the survey. A union representative may assist you in this action.

SUGGESTED LETTER OF NOTIFICATION

Dear

Your name was randomly selected to participate in a USAF Civilian Employee Alcohol Prevalence Survey. The survey will be administered by the Civilian Personnel Office at _____ (place) _____ on _____ (date) 1978 at _____ (time).

The purpose of the survey is to develop estimates of the magnitude of use of alcoholic beverages by Air Force Civilian Employees. The abuse of alcohol is generally considered to be a serious public health problem, a perception which has led to the initiation of various programs of prevention, treatment and rehabilitation. Unfortunately, no systematic effort has been made to assess the scope of alcoholism and alcohol abuse among civilian employees. It is our hope that this survey will be the start of such an assessment.

Your responses to the survey will be completely anonymous and unidentified in any way. Only members of a research team at the Air Force Institute of Technology will have access to them. Your cooperation is needed to make this effort a success.

Sincerely

/s/Civilian Personnel Officer

BASE: _____
(Please fill in)

RESPONSE RATE WORK SHEET

1. NUMBER OF RESPONDENTS ACTUALLY NOTIFIED: _____.

2. NUMBER OF SURVEYS ACTUALLY RECEIVED BY RESPONDENTS: _____.

3. NUMBER OF SURVEYS COMPLETED: _____.

4. NUMBER OF RESPONDENTS WHO DID NOT COMPLETE SURVEY FOR REASONS CONNECTED WITH WORK (e.g., TDY, HEAVY WORK LOAD, ETC.): _____.

5. NUMBER OF RESPONDENTS WHO DID NOT COMPLETE SURVEY BECAUSE THEY WERE IN LEAVE STATUS (e.g., ANNUAL, SICK, LWOP, AWOL, ETC.): _____.

6. NUMBER OF SURVEYS NOT COMPLETED BECAUSE RESPONDENTS WERE NO LONGER EMPLOYED AT THE LOCATION CONTAINED ON ADDRESS STICKERS: _____.

7. NUMBER OF SURVEYS NOT COMPLETED BECAUSE RESPONDENTS WORKED 25 MILES OR MORE FROM THE CCPO: _____.

8. NUMBER OF EMPLOYEES WHO FAILED TO COMPLETE SURVEY FOR REASONS OTHER THAN 4 THROUGH 7: _____.

9. NUMBER OF SURVEYS ADMINISTERED IN GROUPS: _____.

10. NUMBER OF SURVEYS ADMINISTERED THROUGH THE DISTRIBUTION/MAIL SYSTEMS: _____.

USAF CIVILIAN EMPLOYEE ALCOHOL PREVALENCE SURVEY

DEPARTMENT OF THE AIR FORCE
AIR UNIVERSITY (ATC)
AIR FORCE INSTITUTE OF TECHNOLOGY
Wright-Patterson Air Force Base, Ohio

USAF SCN 78-117

PURPOSE OF THE STUDY

The Air Force Institute of Technology is conducting a scientific study of drinking practices of USAF civilian employees. The study draws upon the significant work of Rand Corporation researchers, who are conducting a long term study of the drinking practices of USAF military personnel. This research, along with that of the Rand Corporation, will be used by USAF policymakers to evaluate and improve Air Force policies and programs pertaining to drinking.

You have been selected at random as part of a sample which is representative of all USAF civilian employees. Any answers you provide will be strictly confidential and seen only by Air Force Institute of Technology researchers. No individual information will be given to anyone outside of the research team. The results of this research will be provided in summary form to Headquarters USAF.

PRIVACY STATEMENT

In accordance with paragraph 30, AFR 12-35, Air Force Privacy Program, the following information about this survey is provided:

a. Authority. 10 U.S.C., 8012, Secretary of the Air Force: Powers and Duties, Delegation by.

b. Principal purpose. The survey is being conducted to collect opinions and behavioral information relating to current and future Air Force policies and programs.

c. Routine use. The survey data will be converted to statistical information for use by Air Force Institute of Technology researchers and Air Force policymakers and planners.

d. Participation in this survey is voluntary.

e. No adverse action of any kind may be taken against any individual who elects not to participate in this survey.

INSTRUCTIONS FOR COMPLETING SURVEY

Select only one answer to each question. Mark your answers on the separate answer sheet. Please do not make any marks on this questionnaire form. Do not write your name or SSAN on the answer sheet or the questionnaire form.

Mark your answers carefully so that you enter them next to the answer sheet number corresponding to the survey question number.

Be sure that your answer sheet marks are heavy and that you blacken the oval-shaped space completely. Use only a No. 2 pencil.

Right way to mark answer sheet

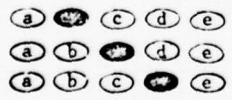

Wrong way to mark answer sheet

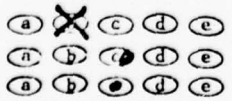

DO NOT STAPLE OR OTHERWISE DAMAGE THE ANSWER SHEET.

WORK LOCATION

Look up the number corresponding to your work station on the list below. Record that number in spaces 1-3 of the numeric grid at the right of the answer sheet.

Work Station Number	Work Station Name
001	Albrook AFS, Canal Zone
002	Almaden AFS, Calif.
003	Altus AFB, Okla.
004	Andersen AFB, Guam
005	Andrews AFB, Md.
006	Ankara AS, Turkey
007	Antigo AFS, Wis.
008	Arnold AFS, Tenn.
009	Athenai Airport, Greece
010	Aviano AB, Italy
011	Barksdale AFB, La.
012	Baudette AFS, Minn.
013	Beale AFB, Calif.
014	Bellows AFS, Hawaii
015	Bergstrom AFB, Tex.
016	Bitburg AB, West Germany
017	Blain AFS, Wash.
018	Blytheville AFB, Ark.
019	Bolling AFB, D.C.
020	Brooks AFB, Tex.
021	Bucks Harbor AFS, Me.
022	Calumet AFS, Mich.
023	Cambria AFS, Calif.
024	Camp New Amsterdam, The Netherlands
025	Campion AFS, APO Seattle
026	Cannon AFB, N.M.
027	Cape Charles AFS, Va.
028	Cape Canaveral AFS, Fla.
029	Cape Lisburne AFS, APO Seattle
030	Cape Newenham AFS, APO Seattle
031	Cape Romanzof AFS, APO Seattle
032	Carswell AFB, Tex.
033	Castle AFB, Calif.
034	Caswell AFS, Me.
035	Chanute AFB, Ill.
036	Charleston AFB, S.C.
037	Charleston AFS, Me.
038	Clark AB, Phillipines
039	Cold Bay AFS, APO Seattle
040	Columbus AFB, Miss.
041	Craig APO, Ala.
042	Cudjoe Key AFS, Fla.
043	Dauphin Island AFS, Ala.
044	Davis, Monthan AFB, Ariz.
045	Dobbins AFB, Ga.
046	Dover AFB, Del.
047	Duluth International Airport, Minn.
048	Dyess AFB, Tex.
049	Edwards AFB, Calif.
050	Eglin AFB, Fla.
051	Eielson AFB, Ala.
052	Ellsworth AFB, S.D.
053	Elmendorf AFB, Ala.
054	Empire AFS, Mich.
055	England AFB, La.
056	Ent AFB, Colo.
057	Fairchild AFB, Wash.
058	Finland AFS, Minn.
059	Finley AFS, N.D.
060	Fort Fisher AFS, N.C.
061	Fort Lee AFS, Va.
062	Fort Yukon AFS, APO Seattle
063	Fortuna AFS, S.D.
064	Francis E. Warren AFB, Wyo.
065	Frankfurt, West Germany
066	Gentile AFS, Ohio
067	Goerge AFB, Calif.
068	Gibbsboro AFS, N.J.
069	Glasgow AFB, Mont.
070	Goodfellow AFB, Tex.
071	Goose AB, Labrador, Canada
072	Grand Forks AFB, N.D.
073	Griffis AFB, N.Y.
074	Grissom AFB, Ind.
075	Gunter AFS, Ala.
076	Hahn AB, West Germany
077	Hancock Field, N.Y.
078	Havre AFS, Mont.
079	Hickam AFB, Hawaii
080	Hill AFB, Utah
081	Holoman AFB, N.M.
082	Homestead AFB, Fla.
083	Howard AFB, Canal Zone
084	Hurlburt Field, Fla.
085	Incirlik AB, Turkey
086	Indian Mountain AFS, APO Seattle
087	Indian Spring AF Auxiliary Field, Nev.
088	Iraklion AS, Crete
089	Izmir, Turkey
090	K.I. Sawyer AFB, Mich.
091	Kaala AFS, APO San Francisco
092	Kadena AB, Okinawa
093	Kalispell AFB, Mont.
094	Keesler AFB, Miss.
095	Keflavik Airport, Iceland
096	Kelley AFB, Tex.
097	Keno AFS, Oregon
098	Kincheloe AFB, Mich.
099	King Salmon Airport, Ala.
100	Kingsley Field, Ore.
101	Kirtland AFB, N.M.
102	Klamath AFS, Calif.
103	Kotzebue AFS, APO Seattle
104	Kunsan AB, South Korea
105	Kwangju AB, South Korea
106	Lackland AFB, Tex.
107	Lajes Field, Azores
108	Lake Charles AFS, La.
109	Langley AFB, Va.
110	Laughlin AFB, Tex.
111	Laurence G. Hanscom AFB, Mass.
112	Lindsey AS, West Germany
113	Little Rock AFB, Ark.
114	Lockport AFS, N.Y.
115	Loring AFB, Me.
116	Los Angeles AFS, Calif.
117	Lowry AFB, Colo.
118	Luke AFB, Ariz.
119	Mac Dill AFB, Fla.
120	Makah AFS, Wash.
121	Malmstrom AFB, Mont.
122	March AFB, Calif.

Work Station Number	Work Station Name
123	Martinsburg AFB, W. Va.
124	Mather AFB, Calif.
125	Maxwell AFB, Ala.
126	McChord AFB, Wash.
127	McClellan AFB, Calif.
128	McConnell AFB, Kan.
129	McGuire AFB, N. J.
130	Mica Peak AFS, Wash.
131	Mill Valley AFS, Calif.
132	Minot AFB, N. D.
133	Minot AFS, N. D.
134	Misawa AB, Japan
135	Montauk AFS, N. Y.
136	Moody AFB, Ga.
137	Moron AB, Spain
138	Mountain Home AFB, Idaho
139	Mt. Hebo AFS, Oregon
140	Mt. Laguna AFS, Calif.
141	Murphy Dome AFS, Alaska
142	Myrtle Beach AFB, S. C.
143	Nellis AFB, Nev.
144	Newark AFS, Ohio
145	Niagara Falls International Airport, N. Y.
146	No. Bend AFS, Oregon
147	No. Charleston AFS, S. C.
148	No. Truro AFS, Mass.
149	Norton AFB, Calif.
150	Offutt AFB, Neb.
151	Oklahoma City AFS, Okla.
152	Opheim AFS, Mont.
153	Osan AB, South Korea
154	Osceola AFS, Wis.
155	Othello AFS, Wash.
156	Patrick AFB, Fla.
157	Pease AFB, N. H.
158	Peterson Field, Colo.
159	Pillar Point AFS, Calif.
160	Plattsburgh AFB, N. Y.
161	Point Arena AFS, Calif.
162	Pope AFB, N. C.
163	Port Austin AFS, Mich.
164	Punamano AFS, FPO Hawaii
165	Ramstein AB, West Germany
166	Randolph AFB, Tex.
167	Reese AFB, Tex.
168	Rhein-Main AB, West Germany
169	Richards-Gebaur AFB, Mo.
170	Richmond AFS, Fla.
171	Rickenbacker AFB, Ohio
172	Roanoke Rapids AFS, N. C.
173	Robins AFB, Ga.
174	RAF Alconbury, United Kingdom
175	RAF Bentwaters, United Kingdom
176	RAF Chicksands, United Kingdom
177	RAF Lakenheath, United Kingdom
178	RAF Mildenhall, United Kingdom
179	RAF Sculthorpe, United Kingdom
180	RAF Upper Heyford, United Kingdom
181	RAF Wethersfield, United Kingdom
182	RAF Woodbridge, United Kingdom
183	San Antonio AFS, Tex.
184	San Pedro Hill AFS, Calif.
185	San Vito dei Normanni AS, Italy
186	Saratoga Springs AFS, N. Y.
187	Sault Sainte Marie AFS, Mich.
188	Savannah AFS, Ga.
189	Scott AFB, Ill.
190	Selfridge AFB (ANG), Mich.
191	Sembach AB, West Germany
192	Seymour Johnson AFB, N. C.
193	Shaw AFB, S. C.
194	Shemya AFB, Alaska
195	Sheppard AFB, Tex.
196	Shu-Lin-Kou AS, Taiwan
197	Sondrestrom AB, Greenland
198	Spangdahlem AB, West Germany
199	Sparrevohn AFS, APO Seattle
200	St. Albans AFS, Vt.
201	St. Louis AFS, Mo.
202	Sunnyvale AFS, Calif.
203	Tachikawa AB, Japan
204	Taegu AB, South Korea
205	Tainan AS, Taiwan
206	Tatalina AFS, APO Seattle
207	Tempelhof Airport, Berlin, Germany
208	Thule AB, Greenland
209	Tin City AFS, APO Seattle
210	Tinker AFB, Okla.
211	Tonopah AFS, Nev.
212	Torrejon AB, Spain
213	Travis AFB, Calif.
214	Truax Field, Wis.
215	Tyndall AFB, Fla.
216	Vance AFB, Okla.
217	Vandenberg AFB, Calif.
218	Warren AFB, Wyo.
219	Watertown AFS, N. Y.
220	Webb AFB, Mo.
221	Westover AFB, Mass.
222	Wheeler AFB, Hawaii
223	Whiteman AFB, Mo.
224	Wiesbaden AB, West Germany
225	Williams AFB, Ariz.
226	Wright-Patterson AFB, Ohio
227	Wurtsmith AFB, Mich.
228	Yokota AB, Japan
229	Zaragoza AB, Spain
230	Zweibrucken AB, West Germany
231	Otis AFB, Ma.
232	Hq, USAF (Washington, DC)
233	Other

1. What is your parent command of assignment?

a. Alaskan Air Command
b. U.S. Air Force Academy
c. Aerospace Defense Command
d. U.S. Air Forces in Europe
e. Air Force Accounting and Finance Center
f. Air Force Logistics Command
g. Air Force Systems Command
h. Air Reserve Personnel Center
i. Air Training Command
j. Air Force Reserve
k. Headquarters U.S. Air Force
l. Air Force Engineering and Services Agency
m. Air Force Management Engineering Agency
n. Air Force Intelligence Service
o. Air Force Data Automation Agency
p. Military Airlift Command
q. Pacific Air Forces
r. Strategic Air Command
s. Tactical Air Command
t. U.S. Air Force Security Service
u. Air Force Military Personnel Center
v. Air Force Inspection and Safety Center
w. Air Force Audit Agency
x. Air Force Office of Special Investigations
y. Air Force Communications Service
z. Air Force Test & Evaluation Center
1. Air Force Commissary Service Command
2. Other

2. What is your present pay system?

a. GS (General Schedule)
b. WS (Wage Supervisor)
c. WL (Wage Leader)
d. WG (Wage Grade)
e. UA (Annual salaried--nonappropriated fund)
f. NA (hourly paid craft worker--nonappropriated fund)
g. AS or PS (hourly paid administrative support or patron services--nonappropriated fund)
h. ST (Scientific and Professional--10 U.S.C. 1581 [formerly P.L. 313])

3. What is your present grade level?

a. 1
b. 2
c. 3
d. 4
e. 5
f. 6
g. 7
h. 8
i. 9
j. 10
k. 11
l. 12
m. 13
n. 14
o. 15
p. 16
q. 17
r. 18
s. 19
t. ST

4. How long have you been assigned at your present base?

a. Less than 1 year
b. 1 year but less than 2
c. 2 years but less than 3
d. 3 years but less than 4
e. 4 years but less than 5
f. 5 years but less than 10
g. 10 years but less than 15
h. 15 years but less than 20
i. 20 years but less than 25
j. 25 years but less than 30
k. 30 years or more

5. What is your age?

a. 17 or under
b. 18
c. 19
d. 20
e. 21
f. 22-24
g. 25-27
h. 28-30
i. 31-33
j. 34-36
k. 37-39
l. 40-42
m. 43-45
n. 46-48
o. 49-51
p. 52-54
q. 55-57
r. 58-60
s. 61-63
t. 64 or over

6. Are you a male or female?

a. Male
b. Female

7. How much do you weigh?

a. 100 lbs or less
b. Between 101 and 120 lbs.
c. Between 121 and 140 lbs.
d. Between 141 and 160 lbs.
e. Between 161 and 180 lbs.
f. Between 181 and 200 lbs.
g. Between 201 and 220 lbs.
h. Between 221 and 240 lbs.
i. Over 240 lbs.

8. Which one of the following do you consider yourself?

a. Black
b. Hispanic
c. American Indian
d. Oriental
e. Other than A through D

9. What is your highest level of education NOW? (Include accepted GED credits.)

a. No high school
b. Some high school
c. GED Certificate or high school equivalency
d. High school graduate
e. One or two years of college or vocational school (include Associate Degree)
f. More than two years of college
g. College degree (BA, BS, or equivalent)
h. Graduate study but no graduate degree
i. Master's degree
j. Doctor's degree (PhD, MD, LLB, EdD, etc.)

10. What is your marital status?

a. Married
b. Never been married
c. Divorced and not remarried
d. Legally separated
e. Widower/widow

11. How many dependents do you have? (Do not include yourself.)

a. None
b. 1 dependent
c. 2 dependents
d. 3 dependents
e. 4 dependents
f. 5 dependents
g. 6 dependents
h. 7 or more dependents

12. How much total active federal civilian service have you completed?

a. Less than 1 year
b. 1 year but less than 2
c. 2 years but less than 3
d. 3 years but less than 4
e. 4 years but less than 5
f. 5 years but less than 6
g. 6 years but less than 7
h. 7 years but less than 8
i. 8 years but less than 9
j. 9 years but less than 10
k. 10 years but less than 12
l. 12 years but less than 14
m. 14 years but less than 16
n. 16 years but less than 18
o. 18 years but less than 20
p. 20 years but less than 22
q. 22 years but less than 24
r. 24 years but less than 26
s. 26 years but less than 28
t. 28 years but less than 30
u. 30 years but less than 32
v. 32 years but less than 34
w. 34 years but less than 36
x. 36 years but less than 38
y. 38 years but less than 40
z. 40 or more years

13. Indicate the primary function in which you are currently employed.

a. Maintenance
b. Logistics Management
c. Supply
d. Procurement
e. Comptroller
f. Transportation
g. Personnel
h. Civil Engineering
i. Security
j. Investigation
k. Medical
l. Research and Development
m. Operations
n. Communications
o. Services
p. Administration
q. Legal
r. Intelligence
s. Other

14. Is the person who prepares your performance report military or civilian?

a. Military
b. Civilian

15. Which one of the following shows how much of the time you feel satisfied with your job?

a. Never
b. Seldom
c. Occasionally
d. About half of the time
e. A good deal of the time
f. Most of the time
g. All the time

16. Choose one of the following statements which best tells how well you like your job.

a. I love it
b. I am enthusiastic about it
c. I like it
d. I am indifferent to it
e. I don't like it
f. I dislike it
g. I hate it

17. Which one of the following best tells how you feel about changing your job?

a. I would quit this job at once if I could.
b. I would take almost any other job in which I could earn as much as I am earning now.
c. I would like to change both my job and my occupation.
d. I would like to exchange my present job for another one.
e. I am not eager to change my job, but I would do so if I could get a better job.
f. I cannot think of any jobs for which I would exchange.
g. I would not exchange my job for any other.

18. Which one of the following shows how you think you compare with other people?

a. No one likes his job better than I like mine.
b. I like my job much better than most people like theirs.
c. I like my job better than most people like theirs.
d. I like my job about as well as most people like theirs.
e. I dislike my job more than most people dislike theirs.
f. I dislike my job much more than most people dislike theirs.
g. No one dislikes his job more than I dislike mine.

19. On most work days, how often does time seem to drag for you?

a. About half the day or more
b. About 1/3 of the day
c. About 1/4 of the day
d. About 1/8 of the day
e. Time never seems to drag

20. Some people are completely involved in the job -- they are absorbed in it night and day. For others, their job is simply one of several interests. How involved do you feel in your job?

a. Very little; my other interests are more absorbing.
b. Slightly involved.
c. Moderately involved; my job and my other interests are equally absorbing to me.
d. Strongly involved.
e. Very strongly involved; my work is the most absorbing interest in my life.

21. How often do you do extra work for your job which is not really required of you?

a. Almost every day
b. Several times a week
c. About once a week
d. Once every few weeks
e. About once a month or less

22. Would you say you work harder, less hard or about the same as other people doing your type of work in your work organization?

a. Much harder than most others
b. A little harder than most others
c. About the same as most others
d. A little less hard than most others
e. Much less hard than most others

	Never	Rarely	A few Times a Week	Often	Always
23. I feel tense, anxious, or have nervous indigestion.	A	B	C	D	E
24. People at work/home arouse my tension	A	B	C	D	E
25. I have tension or migraine headaches, or pain in the neck or shoulders, or insomnia.	A	B	C	D	E
26. I can't turn off my thoughts at night or on weekends long enough to feel relaxed and refreshed the next day.	A	B	C	D	E
27. I find it difficult to concentrate on what I'm doing because of worrying about other things.	A	B	C	D	E
28. I have a difficult time finding enough time to relax.	A	B	C	D	E

	Strongly Agree	Agree	Neutral	Disagree	Strongly Disagree
29. Once I find the time, it is hard for me to relax.	A	B	C	D	E
30. My workday is made up of many deadlines.	A	B	C	D	E

Here are some statements people have made about drinking. Please mark for each statement whether you strongly agree, agree, are neutral, disagree, or strongly disagree.

	Strongly Agree	Agree	Neutral	Disagree	Strongly Disagree
31. The Air Force tries to help employees who have a drinking problem.	A	B	C	D	E
32. It's a good thing that the Air Force has started a policy to deglamorize alcohol.	A	B	C	D	E
33. If you refer yourself to the social actions office for drinking problems, disciplinary action will be taken against you.	A	B	C	D	E
34. It is Air Force policy to fire alcoholics.	A	B	C	D	E
35. It is Air Force policy that alcohol abuse information is made a permanent part of the person's record.	A	B	C	D	E

36. When you were growing up, until about the age of 16, did your father or stepfather drink frequently or heavily?

a. Did not live with a father or stepfather
b. Yes
c. No

37. When you were growing up, until the age of 16, did your mother or stepmother drink frequently or heavily?

a. Did not live with a mother or stepmother
b. Yes
c. No

HERE ARE SOME QUESTIONS ABOUT YOUR OWN DRINKING.

38. How long has it been since your last drink of beer, wine, or hard liquor?

a. Today
b. 1-7 days ago
c. 8-14 days ago
d. 15-30 days ago
e. 31-59 days ago
f. 2-3 months ago (60-119 days ago)
g. 4-6 months ago
h. 7-12 months ago
i. More than one year ago
j. Never drank any beer, wine, or hard liquor

SKIP TO QUESTION 101 IF YOU NEVER DRANK ANY BEER, WINE, OR HARD LIQUOR.

39. During the past 30 days, how many days did you drink beer?

a. Every day
b. Nearly every day
c. 3-4 days a week
d. Once or twice a week
e. 2-3 days during the past 30 days
f. Once during the past 30 days
g. Didn't drink any beer in the past 30 days

40. How much beer did you drink on a typical day (in which you drank beer) during the past 30 days?

a. 1 can (or bottle)
b. 2 cans
c. 3 cans (one quart)
d. 4 cans
e. 5 cans (2 quarts)
f. 6 cans
g. 7 cans
h. 8-11 cans (3 or 4 quarts)
i. 12-17 cans (5 or 6 quarts)
j. 18 or more cans (7 or more quarts)
k. Didn't drink any beer in the past 30 days.

41. During the past 30 days, how many days did you drink wine?

a. Every day
b. Nearly every day
c. 3-4 days a week
d. Once or twice a week
e. 2-3 days during the past 30 days
f. Once during the past 30 days
g. Didn't drink any wine in the past 30 days

42. How much wine did you drink on a typical day (in which you drank wine) during the past 30 days?

a. 1 wine glass (4 oz.)
b. 2 wine glasses
c. 3 wine glasses (12 oz--about half a fifth or bottle)
d. 4 wine glasses
e. 5 wine glasses
f. 6 wine glasses (24 oz--about one fifth or bottle)
g. 7 wine glasses
h. 8-11 wine glasses
i. 12 wine glasses (48 oz--about 2 fifths)
j. More than 12 wine glasses or more than 2 fifths
k. Didn't drink any wine in the past 30 days.

43. During this period, did you usually drink a regular wine or a fortified wine such as sherry, vermouth, port or Dubonnet.

a. A regular wine.
b. A fortified wine (like sherry, vermouth, port, or Dubonnet)

44. During the past 30 days, how many days did you drink hard liquor?

a. Every day
b. Nearly every day
c. 3-4 days a week
d. Once or twice a week
e. 2-3 days during the past 30 days
f. Once during the past 30 days
g. Didn't drink any hard liquor the past 30 days

45. How much hard liquor did you drink in a typical day (in which you drank hard liquor) during the past 30 days?

a. 1 drink
b. 2 drinks
c. 3 drinks
d. 4 drinks
e. 5 drinks
f. 6 drinks
g. 7 drinks
h. 8 drinks
i. 9-11 drinks
j. 12-14 drinks
k. 15-16 drinks
l. 17-24 drinks
m. 25 drinks or more
n. Didn't drink any hard liquor in the past 30 days

46. About how many ounces of hard liquor are there in your average drink?

a. One ounce (one shot)
b. 1.25 ounces
c. 1.5 ounces (one jigger)
d. 2 ounces
e. 3 ounces
f. 4 ounces
g. 5 or more ounces

NOW THINK ABOUT THE PERIOD OF THE PAST YEAR--FROM TODAY BACK TO ONE YEAR AGO....

47. During the past year, how many days did you have 8 or more cans of beer in a single day (3 quarts or more)?

a. Every day or nearly every day
b. 3-4 days a week
c. Once or twice a week
d. 1-3 days a month
e. 7-11 days in the past year
f. 3-6 days in the past year
g. Once or twice in the past year
h. Never in the past year

48. During the past year, how many days did you have 8 or more glasses of wine in a single day (more than a fifth)?

a. Every day or nearly every day
b. 3-4 days a week
c. Once or twice a week
d. 1-3 days a month
e. 7-11 days in the past year
f. 3-6 days in the past year
g. Once or twice in the past year
h. Never in the past year

49. During the past year, how many days did you have 8 or more drinks of hard liquor in a single day (a half pint or more)?

a. Every day or nearly every day
b. 3-4 days a week
c. Once or twice a week
d. 1-3 days a month
e. 7-11 days in the past year
f. 3-6 days in the past year
g. Once or twice in the past year
h. Never in the past year

The following are some of the reasons people have given to explain why they drink wine, beer, or whiskey. When you do drink, how frequently does each of the following reasons explain why you drink? IF YOU DON'T DRINK NOW, ANSWER IN TERMS OF THE PAST WHEN YOU WERE DRINKING.

Rarely or Never	Some of the Time	About Half the Time	Often	Most of the Time
A	B	C	D	E

50. I drink to be sociable.

51. I drink because I like the taste.

52. I drink to forget my worries.

53. I drink to relax.

54. A drink helps cheer me up when I am in a bad mood.

55. A drink helps me when I am depressed or nervous.

56. I drink when I am bored and have nothing to do.

57. I drink when I'm thirsty.

58. I drink to increase my self-confidence.

59. If you knew you had an alcohol problem, would you volunteer for treatment offered by the Air Force?

a. Yes b. No c. I don't know.

Listed below are a number of things connected with drinking that sometimes affect people while at work. Please indicate those things that have happened to you. If they have happened in the past year, please indicate on how many work days they occurred.

60. I was at work, but did not work at my normal level of performance because of drinking or a hangover.

a. Never happened to me on a work day
b. Has happened but not in the past year
c. Happened on 1 work day in the past year
d. 2 work days in the past year
e. 3 work days in the past year
f. 4-6 work days in the past year
g. 7-11 work days in the past year
h. 12-20 work days in the past year
i. 21-39 work days in the past year
j. 40 or more work days in the past year

61. If you ever worked below your normal level of performance because of drinking or a hangover, how would you rate your performance the last time this happened?

a. Never worked below my normal level of performance because of drinking or a hangover.
b. Worked close to 90% of my normal level of performance.
c. Worked close to 80%
d. Worked close to 70%
e. Worked close to 60%
f. Worked close to 50%
g. Worked close to 40%
h. Worked close to 30%
i. Worked close to 20%
j. Worked close to 10%

62. I was late to work or left early because of drinking or a hangover.

a. Never happened to me on a work day.
b. Has happened, but not in the past year.
c. Happened on 1 work day in the past year.
d. 2 work days in the past year.
e. 3 work days in the past year.
f. 4-6 work days in the past year.
g. 7-11 work days in the past year.
h. 12-20 work days in the past year.
i. 21-39 work days in the past year.
j. 40 or more work days in the past year.

63. The last time you were late to work or left early because of drinking or a hangover, how much work did you miss that day?

a. Never was late to work or left early because of drinking or a hangover.
b. Missed about 1/4 day or less
c. Missed about 1/2 day
d. Missed about 3/4 day or more

64. I was off work because of drinking, a hangover, or an illness caused by drinking.

a. Never happened to me on a work day.
b. Has happened, but not in past year.
c. Happened on 1 work day in the past year.
d. 2 work days in the past year.
e. 3 work days in the past year.
f. 4-6 work days in the past year.
g. 7-11 work days in the past year.
h. 12-20 work days in the past year.
i. 21-39 work days in the past year.
j. 40 or more work days in the past year.

65. I was high from drinking while at work.

a. Never happened to me on a work day.
b. Has happened, but not in the past year.
c. Happened on 1 work day in the past year.
d. 2 work days in the past year.
e. 3 work days in the past year.
f. 4-6 work days in the past year.
g. 7-11 work days in the past year.
h. 12-20 work days in the past year.
i. 21-39 work days in the past year.
j. 40 or more work days in the past year.

66. I drank at work.

a. Never happened to me on a work day.
b. Has happened, but not in the past year.
c. Happened on 1 work day in the past year.
d. 2 work days in the past year.
e. 3 work days in the past year.
f. 4-6 work days in the past year.
g. 7-11 work days in the past year.
h. 12-20 work days in the past year.
i. 21-39 work days in the past year.
j. 40 or more work days in the past year.

Below is a list of experiences that people have reported, some in connection with drinking. For each experience, please mark one answer to indicate how often, if at all, you had this experience.

Happened 3 or more times in the past year	Happened twice in the past year	Happened once in the past year	Happened but not in the past year	Never Happened
A	B	C	D	E

PLEASE TAKE YOUR TIME ON THIS, SO YOUR ANSWERS WILL BE AS ACCURATE AS POSSIBLE.

67. I had an illness connected with my drinking which kept me from duty for a week or longer.

68. I got a lower score on my performance rating because of my drinking.

69. I received a disciplinary action because of a problem caused by my drinking.

70. A physician said I should cut down on drinking.

71. I stayed intoxicated for several days at a time.

72. I was reported or arrested by a police officer (military or civilian) for drinking and driving.

73. I was reported or arrested by a police officer for a drinking incident not related to driving.

74. I was reported or arrested by a police officer for reasons unrelated to drinking.

75. I spent time in jail because of my drinking.

76. My drinking contributed to my getting hurt in an accident.

77. My drinking contributed to an accident where others were hurt or property was damaged.

78. My spouse threatened to leave me because of my drinking.

79. My spouse threatened to leave me for other reasons.

80. My spouse left me because of my drinking.

81. My spouse left me for other reasons.

82. If you've ever spent time in jail because of your drinking, how many days were you in jail the last time this happened?

a. Was never in jail because of drinking.
b. 1 day
c. 2 days
d. 3-5 days
e. 6-7 days
f. More than 7 days.

83. Did your supervisor tell you to cut down on your drinking during the past year?

a. Yes b. No c. Not applicable

84. Has your drinking ever contributed to damage or loss of Air Force property?

a. No

YES, and the total value of property lost or damaged due to my drinking was:

b. Less than $100
c. At least $100 but less than $500
d. At least $500 but less than $1,000
e. $1,000 or more.

85. Did you refer yourself to a treatment program for alcohol abuse during the past year?

a. Yes b. No c. Not applicable

86. Did your supervisor refer you to a treatment program for alcohol abuse during the past year?

a. Yes b. No c. Not applicable

Below are some more experiences that people report, some in connection with drinking. For each experience, please indicate how often you had this experience, if at all, in the past year.

Every day or nearly every day	3-4 days a week	Once or twice a week	1-3 days a month	7-11 days in past year	3-6 days in past year	Once or twice in past year	Happened over a year ago	Never Happened
A	B	C	D	E	F	G	H	I

87. I was drunk

88. I got into a fight where I hit someone when I was drinking.

89. I got into a fight where I hit someone when I was not drinking.

90. I awakened the next day unable to remember what I had done while drinking.

91. I took a drink the first thing when I got up in the morning.

92. My hands shook a lot in the morning after drinking.

93. I could not stop drinking before becoming intoxicated.

94. I was sick because of drinking (nausea, vomiting, severe headaches, etc.)

95. I had the "shakes" because of drinking.

96. I drove a car just after I had 5 or more drinks in a two hour period.

97. Have you ever had professional counseling or treatment, or joined a group (such as AA) to get help for a drinking problem?

a. Yes, within the past year.
b. Yes, over a year ago.
c. Never

98. If you ever had help for a drinking problem, was it from a military program, a civilian program, or both?

a. A military program
b. A civilian program
c. Both
d. Not applicable

99. Have you ever been in a hospital or infirmary for an illness or accident connected with your drinking? If yes, how many days altogether were you hospitalized in the past year?

a. Has never happened
b. Happened but not in the past year
c. 1 day in a hospital connected with your drinking in the past year
d. 2 days in the past year
e. 3 days in the past year
f. 4-6 days in the past year
g. 7-13 days in the past year
h. 14-26 days in the past year
i. 27 or more days in the past year.

100. Have you ever seen a physician as an outpatient for an illness or accident connected with your drinking? If yes, how many visits connected with your drinking did you make in the past year?

a. Never have seen a physician for illness or accident connected with drinking.
b. Have visited a physician but not in the past year.
c. 1 visit to a physician connected with drinking in the past year.
d. 2 visits in the past year.
e. 3 visits in the past year.
f. 4-5 visits in the past year.
g. 6-10 visits in the past year.
h. 11-15 visits in the past year.
i. 16 or more visits in the past year.

101. How many Air Force civilian employees (in total) have you directly supervised during the past year (people for whom you prepared performance evaluations)?

a. None
b. 1
c. 2
d. 3
e. 4-6
f. 7-11
g. 12-20
h. 21-30
i. More than 30

IF YOU HAVE BEEN A SUPERVISOR OF CIVILIAN EMPLOYEES DURING THE PAST YEAR (IF YOU HAD AT LEAST ONE PERSON WHOSE PERFORMANCE EVALUATION YOU PREPARED), CONTINUE.

IF YOU HAVE NOT BEEN A SUPERVISOR DURING THE PAST YEAR, YOU ARE FINISHED. THANK YOU FOR YOUR COOPERATION.

ANSWER THE FOLLOWING QUESTIONS ABOUT THE CIVILIAN EMPLOYEES YOU HAVE SUPERVISED IN THE PAST YEAR (PEOPLE WHOSE PERFORMANCE EVALUATIONS YOU PREPARED).

102. In your opinion, how many of the people you supervised during the past year had a drinking problem that affected their work?

a. None, ever
b. At least 1, but not in the past year
c. 1 in the past year
d. 2 in the past year
e. 3 in the past year
f. 4 in the past year
g. 5 in the past year
h. 6-10 in the past year
i. More than 10 in the past year

103. How many of the people you supervised during the past year did you tell to cut down on their drinking?

a. None, ever
b. At least 1, but not in the past year
c. 1 in the past year
d. 2 in the past year
e. 3 in the past year
f. 4 in the past year
g. 5 in the past year
h. 6-10 in the past year
i. More than 10 in the past year

104. How many of the people you supervised during the past year did you refer to a treatment program for alcohol abuse?

a. None, ever
b. At least 1, but not in the past year
c. 1 in the past year
d. 2 in the past year
e. 3 in the past year
f. 4 in the past year
g. 5 in the past year
h. 6-10 in the past year
i. More than 10 in the past year.

105. How many of the people you supervised during the past year did you give lower performance ratings because of alcohol abuse that affected their work?

a. None, ever
b. At least 1, but not in the past year
c. 1 in the past year
d. 2 in the past year
e. 3 in the past year
f. 4 in the past year
g. 5 in the past year
h. 6-10 in the past year
i. More than 10 in the past year

106. For how many of those you supervised during the past year did you take disciplinary action against because of a problem related to their alcohol abuse?

a. None, ever
b. At least 1, but not in the past year
c. 1 in the past year
d. 2 in the past year
e. 3 in the past year
f. 4 in the past year
g. 5 in the past year
h. 6-10 in the past year
i. More than 10 in the past year

107. For the people you supervised during the past year, how many man days (in total including partial days) would you say were lost because of absenteeism due to alcohol abuse?

a. None
b. 1 man day
c. 2 man days
d. 3 man days
e. 4 man days
f. 5 man days
g. 6 man days
h. 7-9 man days
i. 10 or more man days

108. For the people you supervised during the past year, how many man days (in total) would you say they worked below their normal level of performance because of drinking or a hangover?

a. None
b. 1 man day
c. 2 man days
d. 3 man days
e. 4 man days
f. 5 man days
g. 6 man days
h. 7-9 man days
i. 10 or more man days

109. During the past year, what is the average amount of time you spent dealing with alcohol-related problems of people you supervised?

a. Spent no time on these problems
b. 1 day or less
c. 2 days
d. 3 days
e. 4 days
f. 5 days
g. 6 days
h. 7-9 days
i. 10 or more days.

THANK YOU FOR YOUR COOPERATION.

APPENDIX B

Composite Measures Formulation

Included within this appendix is a table listing all the formulas of the composite measures and a table of factor loadings for these measures.

TABLE XXV

Formulas for Computing Composite Measure Scores

1. JOB SATISFACTION

   16 - Q16 - Q18 + Q15 + Q17

2. WORK INVOLVEMENT

   12 - Q21 - Q22 + Q19 + Q20

3. STRESS

   Q23 + Q24 + Q25 + Q26 + Q27 + Q28

4. PSYCHOLOGICAL DEPENDENCE

   Q52 + Q53 + Q54 + Q55 + Q56 + Q58

5. ORGANIZATIONAL TRUST

   Q33 + Q34 + Q35

6. PROGRAM WORTH

   Q31 + Q32

TABLE XXVI

Factor Loadings of Items Comprising Composite Measures

1. JOB SATISFACTION

Question	Loadings
15	-.83169
16	.85486
17	-.73893
18	.77030

2. WORK INVOLVEMENT

Question	Loadings
19	.73085
20	.72307
21	-.62957
22	-.56192

3. STRESS

Question	Loadings
23	.79530
24	.75562
25	.72784
26	.58788
27	.71675
28	.68604

4. PSYCHOLOGICAL DEPENDENCE

Question	Loadings
52	.72334
53	.64784
54	.78436
55	.82646
56	.66081
58	.66525

TABLE XXVI (cont.)

Factor Loadings of Items Comprising Composite Measures

5. ORGANIZATIONAL TRUST

Question	Loadings
33	.78862
34	.81807
35	.76489

6. PROGRAM WORTH

Question	Loadings
31	.75531
32	.83123

APPENDIX C

Factor Analysis of Problem Drinkers

This appendix includes tables of the factor loadings of alcohol addiction criteria and factor analysis of adverse affects criteria.

TABLE XXVII

Factor Loadings of Alcohol Addiction

Question	Loading
90	.81190
91	.83401
92	.89131
93	.83471
95	.88548

TABLE XXVIII

Factor Analysis of Adverse Affects Items

Item	Factor 1 "Social Consequences"	Factor 2 "Job Problems"	Factor 3 "Health Problems"
Q67	.47068	.44075	.00721
Q68	.51749	.44475	-.07154
Q69	.61300	.46642	-.06690
Q72	.73099	.13643	-.10788
Q73	.78638	.12239	-.08660
Q75	.75381	.06912	-.12034
Q76	.76840	.13056	-.17767
Q77	.78167	.11487	-.12230
Q78	.50995	.45440	-.06547
Q80	.69316	.35940	-.08963
Q88	.24454	.22761	-.21615
Q99	-.12448	-.22647	.77817
Q100	-.10667	-.15852	.77294
DAYSOFF	-.02765	-.40300	.17127
VT	-.07720	-.41505	.19657
Eigenvalue	6.15084	1.69426	1.13814
Percent Variance Explained	41.8	11.3	7.6

APPENDIX D

Mean Values for Hypothesis Tests

This appendix consists of a table listing mean values for hypothesis tests which examined more than two groups.

TABLE XXIX

Group Means for Hypothesis Tests
In Which More Than Two Groups Are Examined

Hypothesis	Group	Mean (% of alcohol addicts)
#32	GS	.007
	WG	.017
	WL	.042
	WS	.016
Hypothesis	**Group**	**Mean (% of alcohol addicts)**
#33	Black	.021
	Hispanic	.023
	American Indian	.025
	Oriental	.008
	Other/Caucasian	.008
Hypothesis	**Group**	**Mean (% of alcohol addicts)**
#34	Maintenance	.011
	Logistics Mgt	.014
	Supply	.009
	Procurement	.000
	Comptroller	.015
	Transportation	.010
	Personnel	.008
	Civil Engineering	.007
	Security	.000
	Investigation	.000
	Medical	.009
	R&D	.003
	Operations	.004
	Communications	.000
	Services	.015
	Admin	.010
	Legal	.019
	Intelligence	.041
	Other	.010
Hypothesis	**Group**	**Mean (% of persons adversely affected by alcohol)**
#49	17-20 yrs	.111
	21-24 yrs	.061
	25-30 yrs	.048
	31-39 yrs	.042
	40-48 yrs	.040
	49-60 yrs	.032
	over 60 yrs	.036

TABLE XXIX (cont.)

Group Means for Hypothesis Tests
In Which More Than Two Groups Are Examined

Hypothesis	Group	Mean (% of women who drink)
#100	Maintenance	.86
	Logistics Mgt	.87
	Supply	.85
	Procurement	.87
	Comptroller	.92
	Transportation	.94
	Personnel	.92
	Civil Engineering	.88
	Security	.92
	Investigation	.78
	Medical	.90
	R&D	.84
	Operations	.82
	Communications	.87
	Services	.89
	Admin	.90
	Legal	.97
	Intelligence	.99
	Other	.87

APPENDIX E

AID Analysis

Included within this appendix are figures depicting AID trees resulting from analysis of alcohol addicts, persons adversely affected by alcohol, problem drinkers and alcohol consumption levels. Also included is a table listing variables used as predictors, along with their coded values, and one describing how composite measures were scaled.

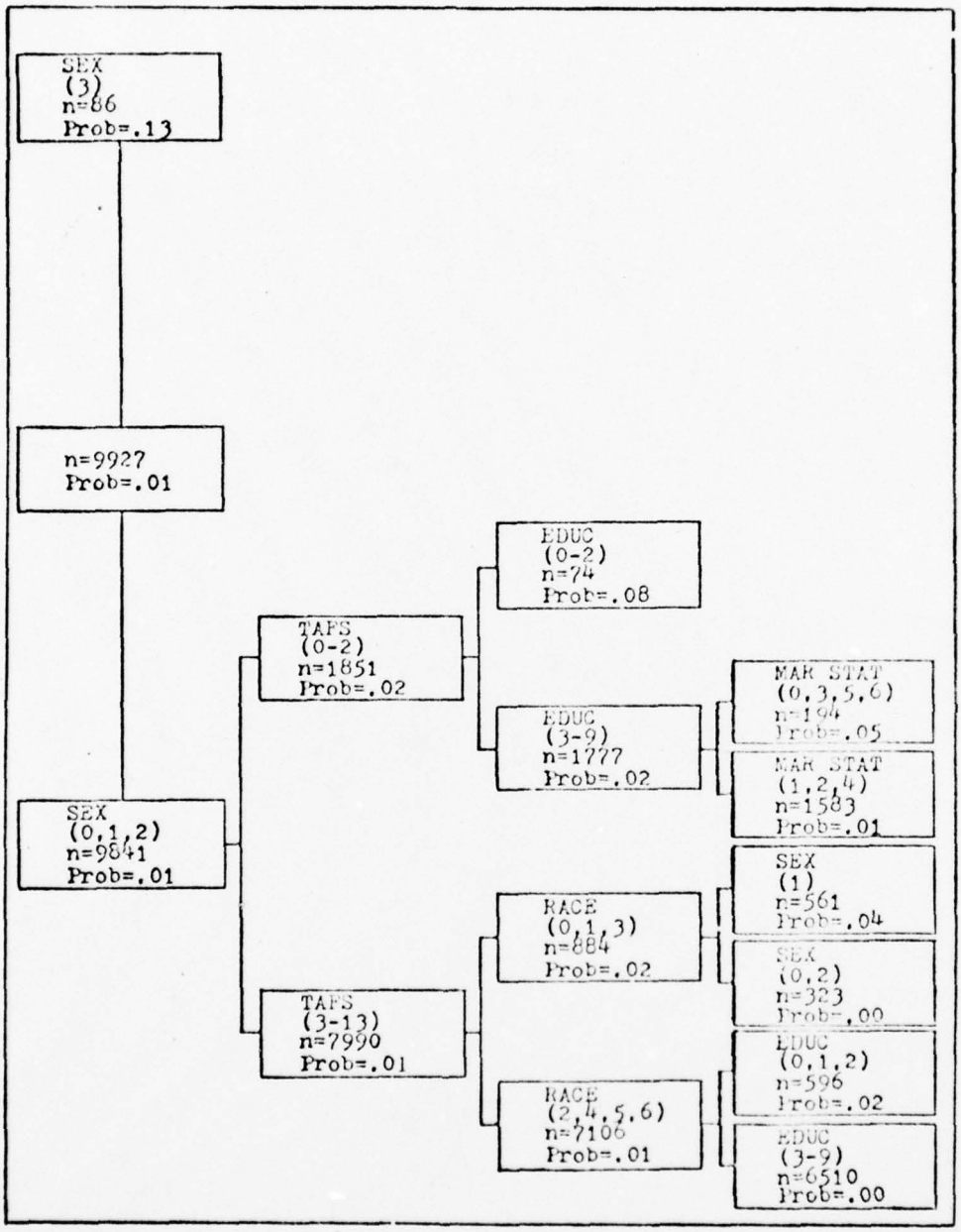

Figure E-1. Alcohol Addiction AID Tree with Demographic Predictors

(NOTE: Numbers in parentheses are codes. See Table XXX.)

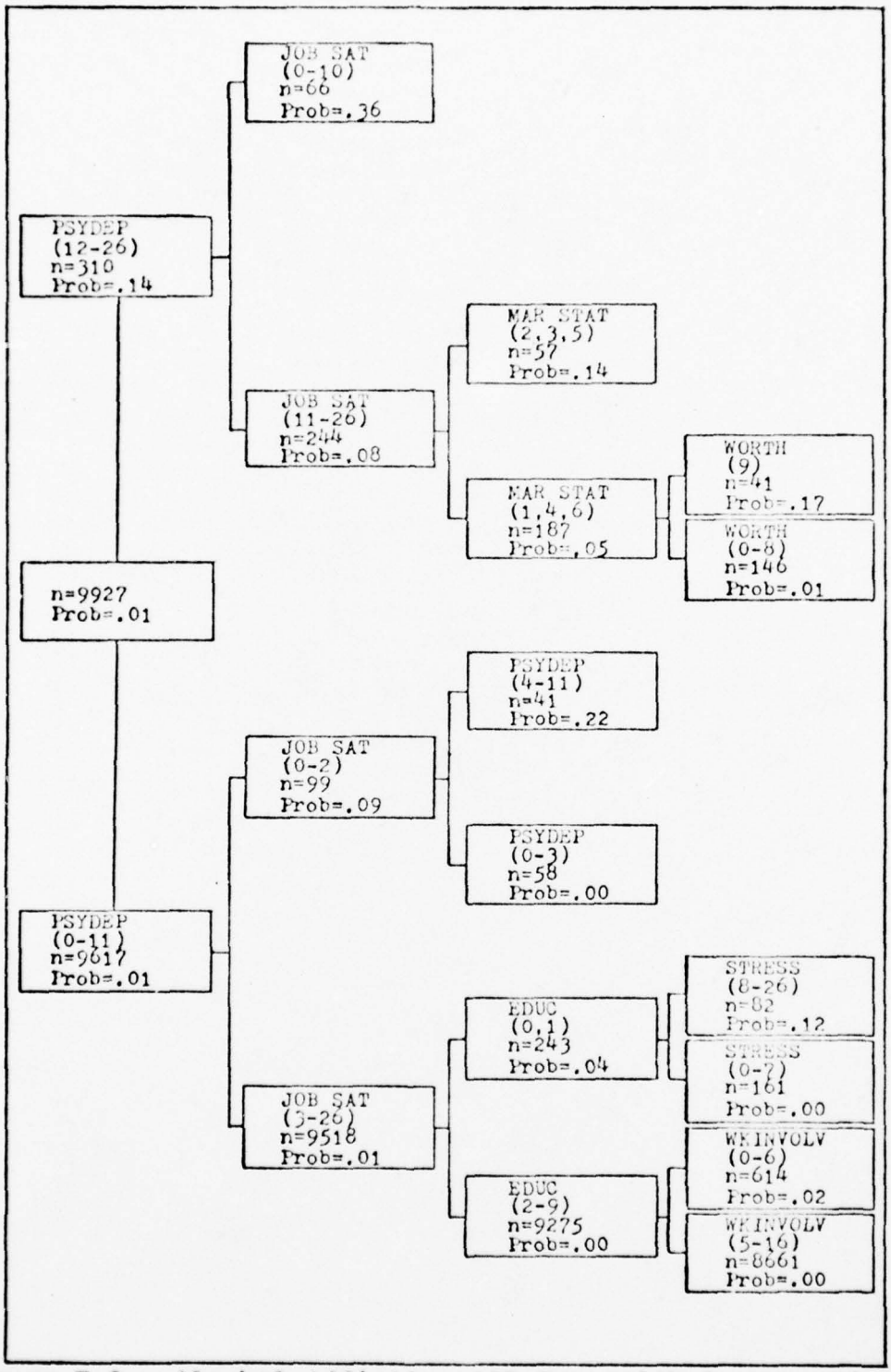

Figure E-2. Alcohol Addiction AID Tree with Demographic and Composite Measure Predictors
(NOTE: Numbers in parentheses are codes. See Table XXX.)

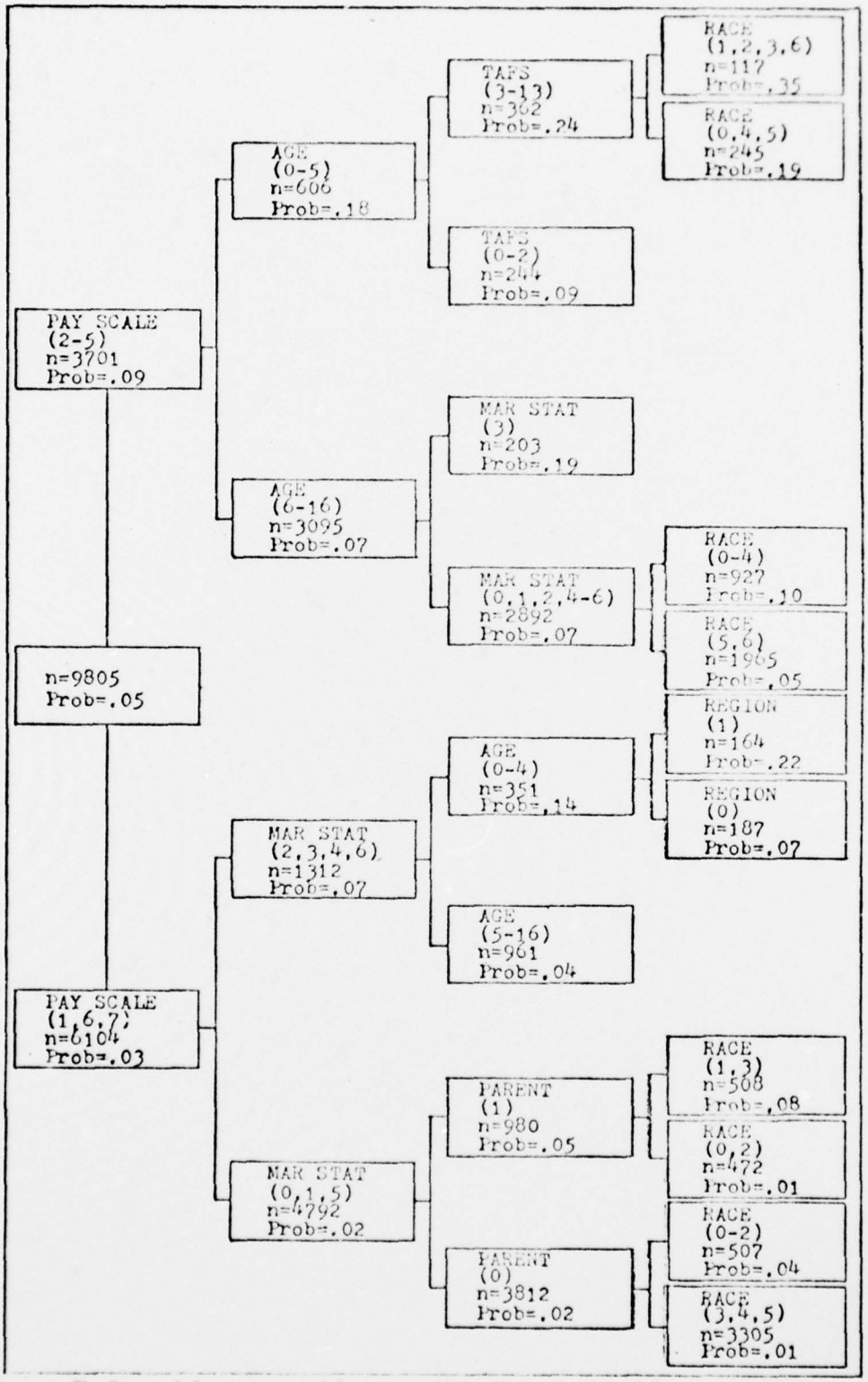

Figure E-3. Adverse Affects AID Tree with Demographic Predictors

(NOTE: Numbers in parentheses are codes. See Table XXX.)

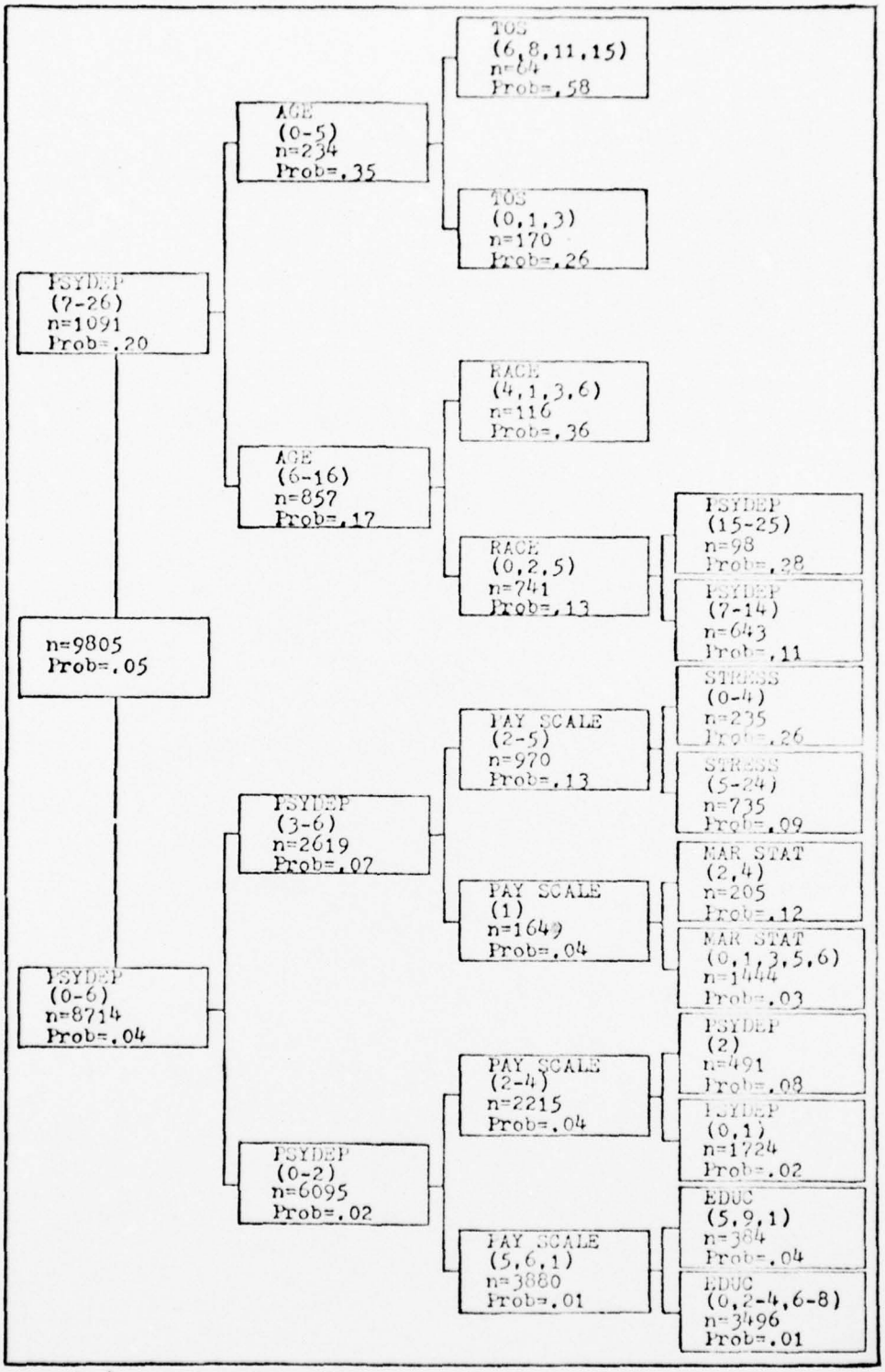

Figure E-4. Adverse Affects AID Tree with Demographic and Composite Measure Predictors
(NOTE: Numbers in parentheses are codes. See Table XXX.)

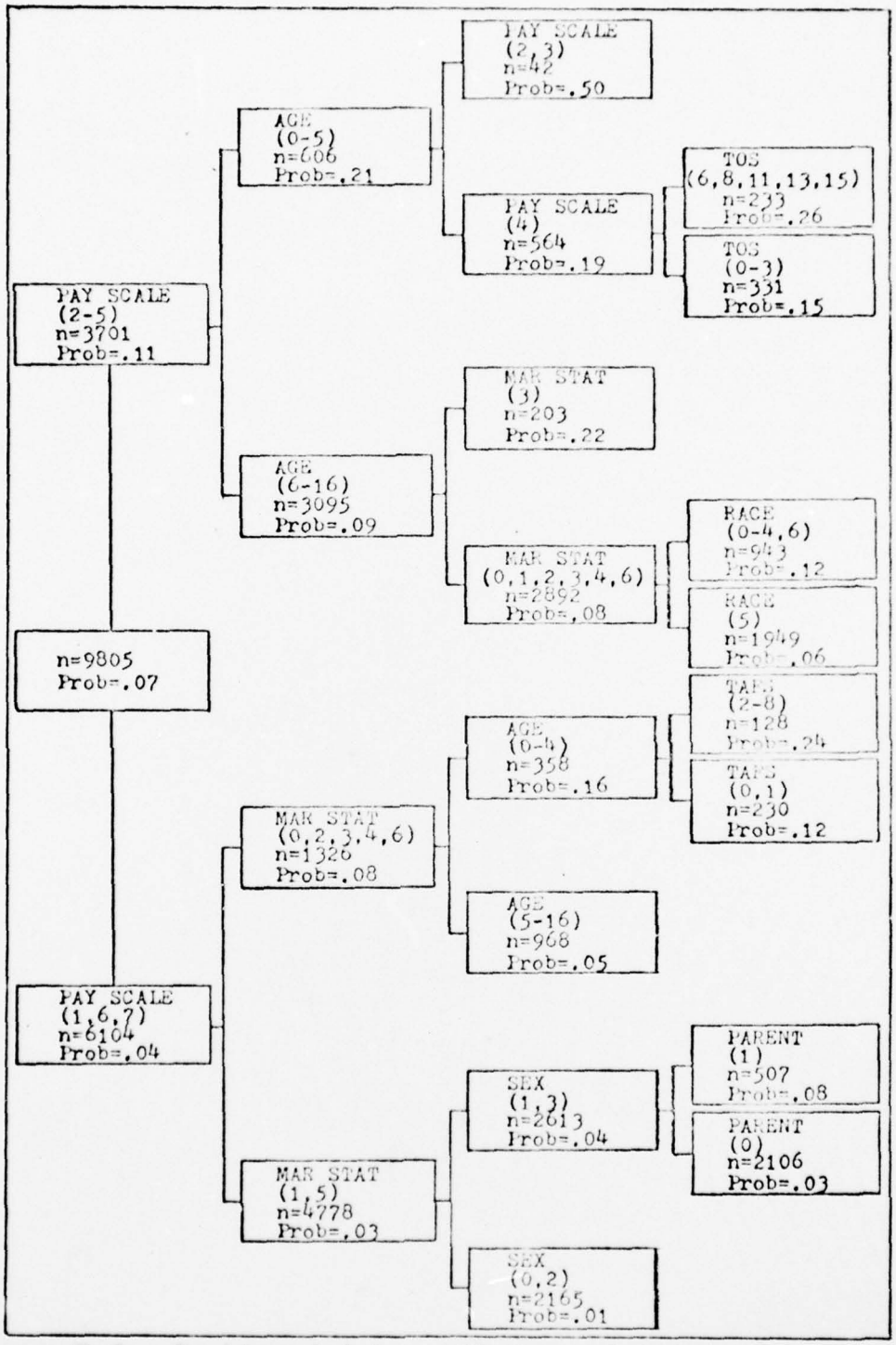

Figure E-5. Problem Drinker AID Tree with Demographic Predictors

(NOTE: Numbers in parentheses are codes. See Table XXX.)

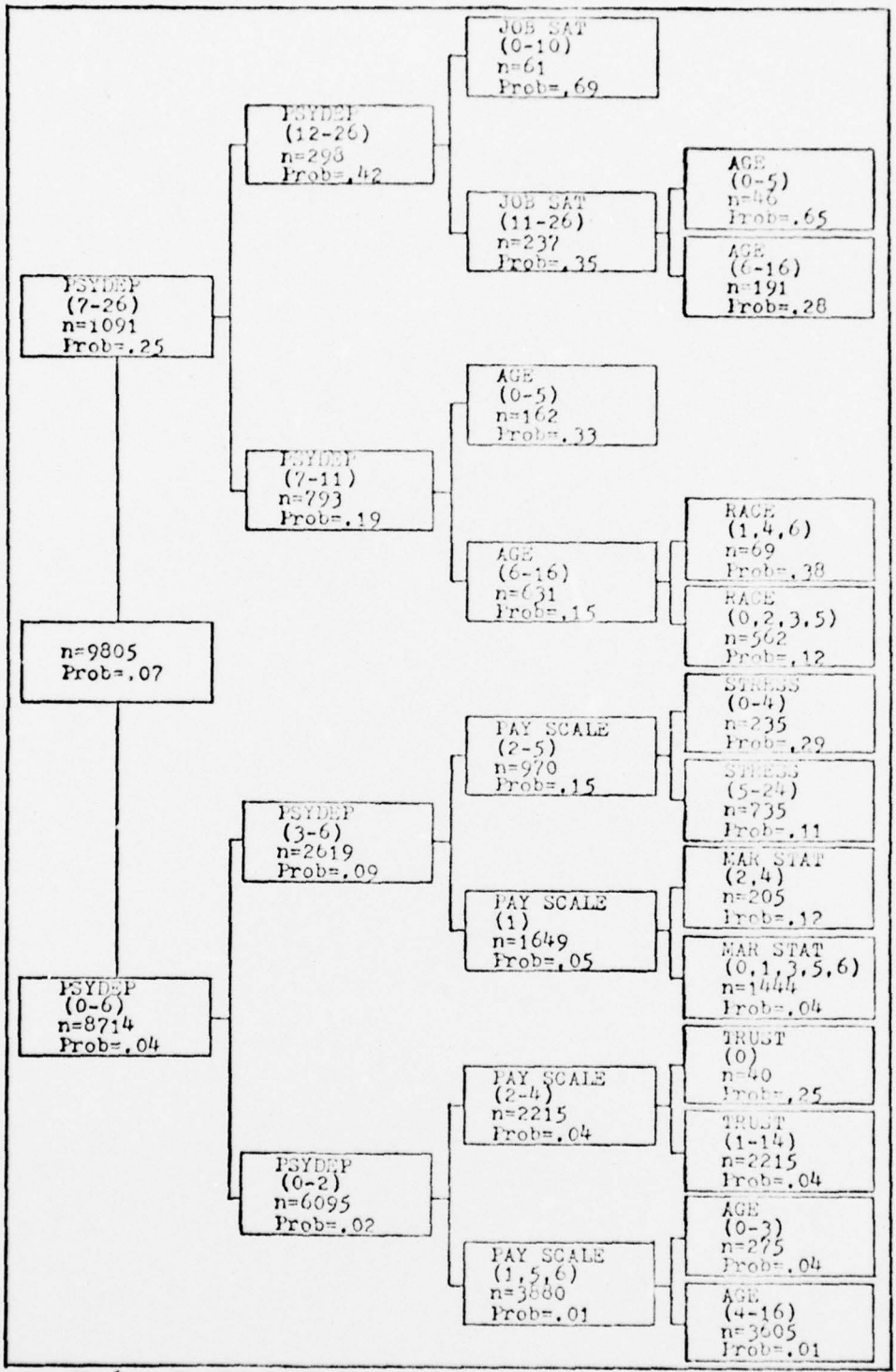

Figure E-6. Problem Drinker AID Tree with Demographic and Composite Measure Predictors
(NOTE: Numbers in parentheses are codes. See Table XXX.)

THIS PAGE IS BEST QUALITY PRACTICABLE
FROM COPY FURNISHED TO DDC

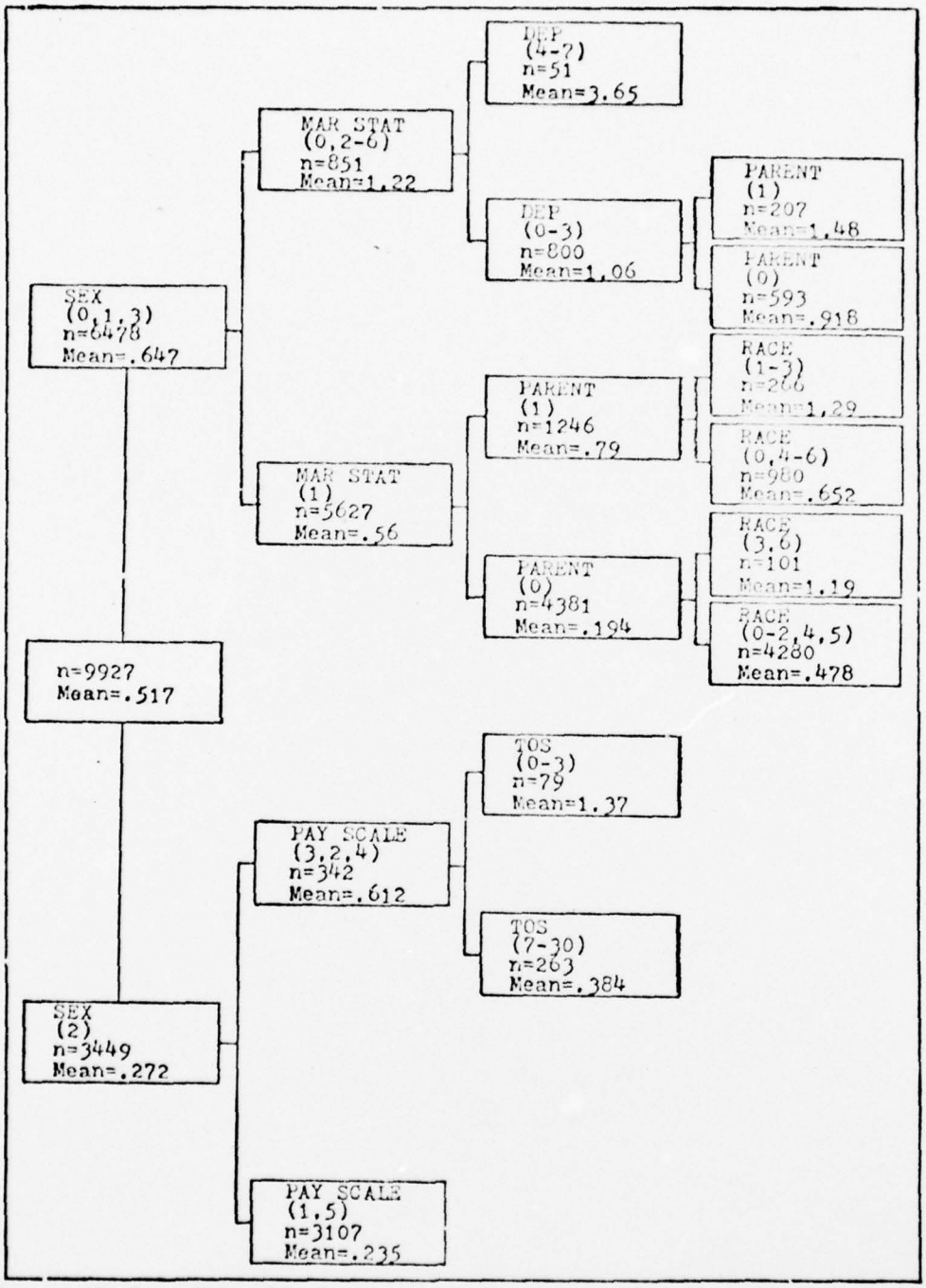

Figure E-7. VT AID Tree with Demographic Predictors
(NOTE: Numbers in parentheses are codes. See Table XXX.)

THIS PAGE IS BEST QUALITY PRACTICABLE
FROM COPY FURNISHED TO DDC

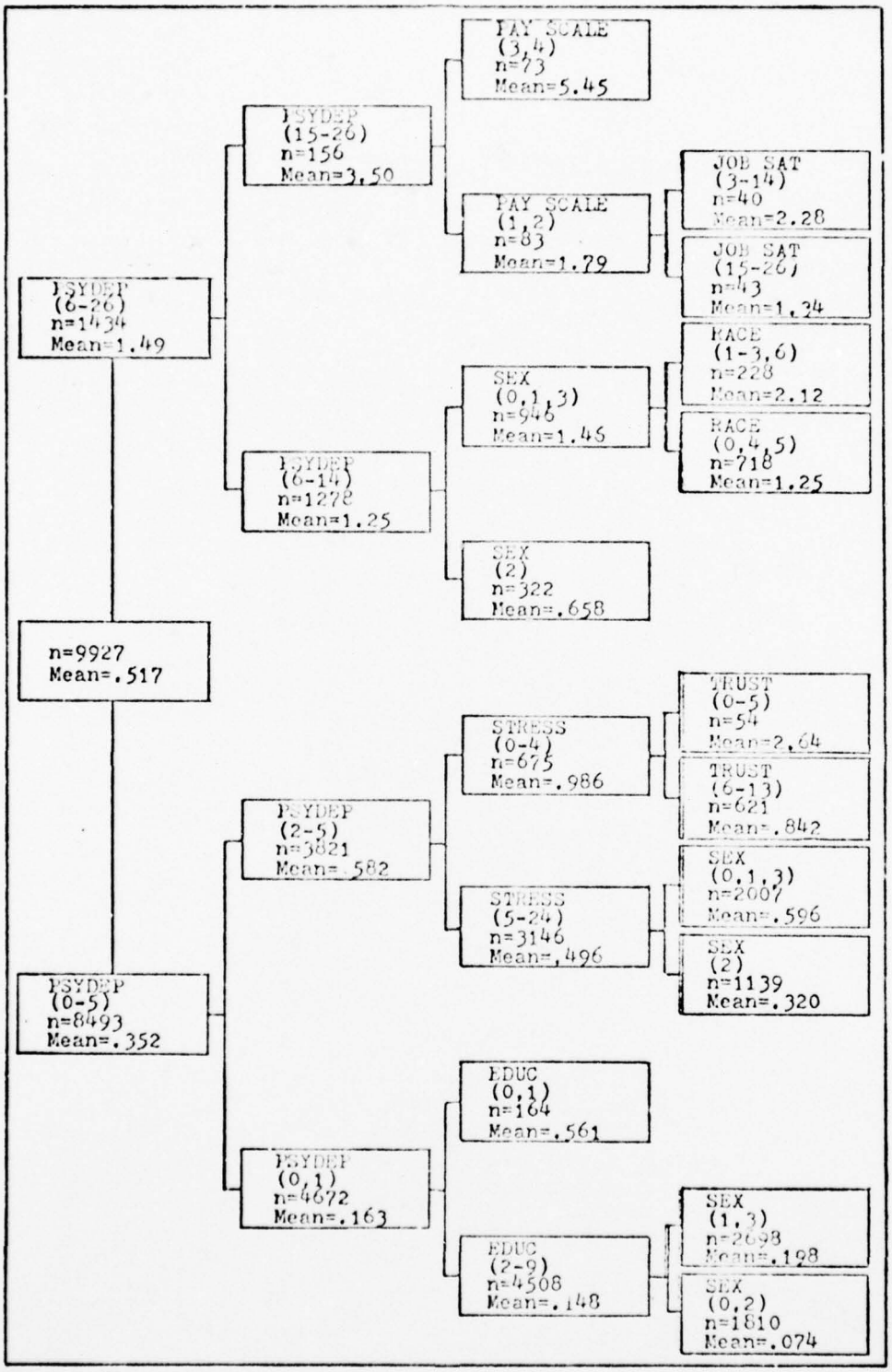

Figure E-8. VT AID Tree with Demographic and Composite Measure Predictors
(NOTE: Numbers in parentheses are codes. See Table XXX.)

TABLE XXX

Variables Used as Predictors in AID Analysis
Along with Coded Values

A. Demographics

1. Age

Code	Category
0/17	missing/out of range responses
1	17-19 yrs
2	20-22 yrs
3	23-25 yrs
4	26-28 yrs
5	29-31 yrs
6	32-34 yrs
7	35-37 yrs
8	38-40 yrs
9	41-43 yrs
10	44-46 yrs
11	47-49 yrs
12	50-52 yrs
13	53-55 yrs
14	56-58 yrs
15	59-61 yrs
16	62-64 yrs

2. Sex

Code	Category
0/3	missing/out of range responses
1	male
2	female

3. Marital Status (MAR STAT)

Code	Category
0/6	missing/out of range responses
1	married
2	never been married
3	divorced and not remarried
4	legally separated
5	widower/widow

4. Race

Code	Category
0/6	missing/out of range responses
1	Black
2	Hispanic

TABLE XXX (cont.)

Variables Used as Predictors in AID Analysis
Along with Coded Values

4. Race (cont.)

Code	Category
3	American Indian
4	Oriental
5	Caucasian/Other

5. Parental Heavy Drinkers (PARENT)

Code	Category
2	missing, out of range responses
0	did not have parent(s) who drank heavily
1	had parent(s) who drank heavily

6. Geographic Region (REGION)

Code	Category
2	missing, out of range responses
0	dry region
1	wet region

7. Educational Level (EDUC)

Code	Category
0/11	missing/out of range responses
1	no high school
2	some high school
3	high school equivalency
4	high school graduate
5	1-2 yrs college or vocational school
6	>2 yrs of college
7	college graduate
8	graduate study
9	Master's degree
10	Doctor's degree

8. Total Active Federal Service (TAFS)

Code	Category
0	less than 2 yrs
1	2-3 yrs
2	4-5 yrs
3	6-7 yrs
4	8-9 yrs

TABLE XXX (cont.)

Variables Used as Predictors in AID Analysis
Along with Coded Values

8. Total Active Federal Service (TAFS) (cont.)

Code	Category
5	10-11 yrs
6	12-13 yrs
7	14-15 yrs
8	16-17 yrs
9	18-19 yrs
10	20-21 yrs
11	22-23 yrs
12	24-25 yrs
13	26-27 yrs
14	greater than 27 yrs

9. Dependents (DEP)

Code	Number
0	missing, out of range responses
1	none
2	one
3	two
4	three
5	four
6	five
7	six
8	seven or more

10. Pay Scale

Code	Category
0/9	missing/out of range responses
1	GS
2	WS
3	WL
4	WG
5	UA
6	NA
7	AS
8	ST

11. Single Parent Families (ONE PAR)

Code	Category
2	missing, out of range responses
0	lived with both parents
1	lived with only one parent

TABLE XXX (cont.)

Variables Used as Predictors in AID Analysis
Along with Coded Values

12. Salary

Code	Category
0	less than $10,000
1	$10,000-$14,999
2	$15,000-$19,999
3	$20,000-$24,999
4	$25,000-$29,999
5	$30,000-$34,999
6	$35,000-$39,999
7	$40,000-$44,999
8	$45,000-$49,999
9	$50,000 and over

13. Supervisory Status (SUPV)

Code	Category
0/3	missing/out of range responses
1	non-supervisor
2	supervisor

14. Socioeconomic Status (STATUS)

Code	Category
2	missing,out of range responses
0	low socioeconomic status
1	high socioeconomic status

15. Time on Station (TOS)

Code	Category
0	less than 1 yr
1	1-2 yrs
2	2-3 yrs
3	3-4 yrs
4	4-5 yrs
5	5-6 yrs
6	6-7 yrs
7	7-8 yrs
8	8-9 yrs
9	9-10 yrs
10	10-11 yrs
11	11-12 yrs
12	12-13 yrs
13	13-14 yrs
14	14-15 yrs

TABLE XXX (cont.)

Variables Used as Predictors in AID Analysis
Along with Coded Values

15. Time on Station (TOS) (cont.)

Code	Category
15	15-16 yrs
16	16-17 yrs
17	17-18 yrs
18	18-19 yrs
19	19-20 yrs
20	20-21 yrs
21	21-22 yrs
22	22-23 yrs
23	23-24 yrs
24	24-25 yrs
25	25-26 yrs
26	26-27 yrs
27	27-28 yrs
28	28-29 yrs
29	29-30 yrs
30	over 30 yrs

B. Composite Measures

1. Job Satisfaction (JOB SAT)

Code	Score
0/26	missing/out of range responses
1	four
2	five
3	six
4	seven
5	eight
6	nine
7	ten
8	eleven
9	twelve
10	thirteen
11	fourteen
12	fifteen
13	sixteen
14	seventeen
15	eighteen
16	nineteen
17	twenty
18	twenty-one
19	twenty-two
20	twenty-three

AD-A076 455 AIR FORCE INST OF TECH WRIGHT-PATTERSON AFB OH SCHOO--ETC F/G 5/10
ALCOHOL MISUSE AMONG USAF CIVILIAN EMPLOYEES.(U)
SEP 79 R D LARKINS

UNCLASSIFIED AFIT/GSM/SM/79S-9 NL

3 OF 3
AD
A076455

END
DATE
FILMED
12-79
DDC

TABLE XXX (cont.)

Variables Used as Predictors in AID Analysis
Along with Coded Values

1. Job Satisfaction (JOB SAT) (cont.)

Code	Score
21	twenty-four
22	twenty-five
23	twenty-six
24	twenty-seven
25	twenty-eight

2. Work Involvement (WKINVOLV)

Code	Score
0/18	missing/out of range responses
1	four
2	five
3	six
4	seven
5	eight
6	nine
7	ten
8	eleven
9	twelve
10	thirteen
11	fourteen
12	fifteen
13	sixteen
14	seventeen
15	eighteen
16	nineteen
17	twenty

3. Organizational Trust (TRUST)

Code	Score
0/14	missing/out of range responses
1	three
2	four
3	five
4	six
5	seven
6	eight
7	nine
8	ten
9	eleven
10	twelve
11	thirteen

TABLE XXX (cont.)

Variables Used as Predictors in AID Analysis
Along with Coded Values

3. Organizational Trust (TRUST) (cont.)

Code	Score
12	fourteen
13	fifteen

4. Stress

Code	Score
0/26	missing/out of range responses
1	six
2	seven
3	eight
4	nine
5	ten
6	eleven
7	twelve
8	thirteen
9	fourteen
10	fifteen
11	sixteen
12	seventeen
13	eighteen
14	nineteen
15	twenty
16	twenty-one
17	twenty-two
18	twenty-three
19	twenty-four
20	twenty-five
21	twenty-six
22	twenty-seven
23	twenty-eight
24	twenty-nine
25	thirty

5. Program Worth (WORTH)

Code	Score
0/10	missing/out of range responses
1	two
2	three
3	four
4	five
5	six
6	seven

TABLE XXX (cont.)

Variables Used as Predictors in AID Analysis
Along with Coded Values

5. Program Worth (WORTH) (cont.)

Code	Score
7	eight
8	nine
9	ten

6. Psychological Dependence on Alcohol (PSYDEP)

Code	Score
0/26	missing/out of range responses
1	six
2	seven
3	eight
4	nine
5	ten
6	eleven
7	twelve
8	thirteen
9	fourteen
10	fifteen
11	sixteen
12	seventeen
13	eighteen
14	nineteen
15	twenty
16	twenty-one
17	twenty-two
18	twenty-three
19	twenty-four
20	twenty-five
21	twenty-six
22	twenty-seven
23	twenty-eight
24	twenty-nine
25	thirty

TABLE XXXI

Scaling Composite Measures

1. Job Satisfaction

Mean: 19.726 Standard Dev: 3.736

Score	Adjective Descriptor
<16	low, little
16-23	moderate, average
>23	high

2. Work Involvement

Mean: 14.482 Standard Dev: 2.919

Score	Adjective Descriptor
<12	low, little
12-17	moderate, average
>17	high

3. Psychological Dependence on Alcohol

Mean: 8.348 Standard Dev: 3.366

Score	Adjective Descriptor
<8	low, little
>8	high

4. Stress

Mean: 12.587 Standard Dev: 3.96

Score	Adjective Descriptor
<9	low, little
9-17	moderate, average
>17	high

TABLE XXXI (cont.)

Scaling Composite Measures

5. Program Worth

Mean: 7.811 Standard Dev: 1.445

Score	Adjective Descriptor
<6	low, little
6-9	moderate, average
>9	high

6. Organizational Trust

Mean: 10.928 Standard Dev: 2.297

Score	Adjective Descriptor
<9	low, little
9-13	moderate, average
>13	high

APPENDIX F

Discriminant/Regression Analysis

This appendix consists of tables listing independent variables used in discriminant analysis of problem drinking categories and regression analysis of alcohol consumption levels(VT).

TABLE XXXII

Independent Variables Used in Discriminant Analysis of Alcohol Addiction

Psychological Dependence on Alcohol(PSYDEP)
Job Satisfaction(JOB SAT)
Work Involvement(WKINVOLV)
Stress
Organizational Trust(TRUST)
Program Worth(WORTH)
Age(Q5)
Sex(Q6)
Parental Heavy Drinkers(PARENT)
Single Parent Families(ONE PAR)
Geographic Region(REGION)
Number of Dependents(DEP)(Q11)
Educational Level(EDUC)(Q9)
Total Active Federal Service(TAFS)(Q12)
Supervisory Status(Q101)

Dummy Variables

Race(Q8)

Variable	Split
R1	Black, Hispanic, American Indian/ Oriental, Caucasian
R2	Black, American Indian/Hispanic, Oriental, Caucasian
R3	Hispanic/Black, American Indian, Oriental, Caucasian
R4	Black/Hispanic, American Indian, Oriental, Caucasian

Pay Scale(Q2)

Variable	Split
P1	GS/WG,WL,WS,Others

TABLE XXXII (cont.)

Independent Variables Used in Discriminant Analysis of Alcohol Addiction

Marital Status(Q10)

Variable	Split
M1	Widower/Married, never been married, divorced, legally separated
M2	Never been married, divorced, widower/Married, legally separated
M3	Married, never been married, legally separated/Divorced, widowed
M4	Divorced/Married, never been married, legally separated, widowed

Interaction Terms

Term	Composition
I1	(PSYDEP)x(JOB SAT)
I2	(STRESS)x(TRUST)
I3	(JOB SAT)x(TRUST)

TABLE XXXIII

Independent Variables Used in Discriminant Analysis of Adverse Affects

Psychological Dependence on Alcohol(PSYDEP)
Job Satisfaction(JOB SAT)
Work Involvement(WKINVOLV)
Stress
Organizational Trust(TRUST)
Program Worth(WORTH)
Age(Q5)
Sex(Q6)
Parental Heavy Drinkers(PARENT)
Single Parent Families(ONE PAR)
Geographic Region(REGION)
Number of Dependents(DEP)(Q11)
Educational Level(EDUC)(Q9)
Total Active Federal Service(TAFS)(Q12)
Supervisory Status(Q101)

Dummy Variables

Race(Q8)

Variable	Split
R1	Oriental, Caucasian/Black, Hispanic, American Indian
R2	Hispanic, Caucasian/Black, Oriental, American Indian
R3	Black, Hispanic/American Indian, Oriental, Caucasian
R4	Caucasian/Black, Hispanic, Oriental, American Indian

Pay Scale(Q2)

Variable	Split
P1	GS,NA,AS/WL,WS,WG,UA
P2	GS/WL,WS,WG,UA,NA,AS
P3	GS,UA,NA/WL,WS,WG,AS

TABLE XXXIII (cont.)

Independent Variables Used in Discriminant Analysis of Adverse Affects

Marital Status(Q10)

Variable	Split
M1	Married, widower/Never been married, divorced, legally separated
M2	Divorced/Married, widower, never been married, legally separated
M3	Never been married, legally separated/Divorced, married, widower

Interaction Terms

Term	Composition
I1	(AGE)x(WKINVOLV)
I2	(AGE)x(STRESS)
I3	(PSYDEP)x(AGE)

TABLE XXXIV

Independent Variables Used in Discriminant Analysis of Problem Drinkers

Psychological Dependence on Alcohol(PSYDEP)
Job Satisfaction(JOB SAT)
Work Involvement(WKINVOLV)
Stress
Organizational Trust(TRUST)
Program Worth(WORTH)
Age(Q5)
Sex(Q6)
Parental Heavy Drinkers(PARENT)
Single Parent Families(ONE PAR)
Geographic Region(REGION)
Number of Dependents(DEP)(Q11)
Educational Level(EDUC)(Q9)
Total Active Federal Service(TAFS)(Q12)
Supervisory Status(Q101)

Dummy Variables

Race(Q8)

Variable	Split
R1	Oriental, Caucasian/Black, Hispanic, American Indian
R2	Hispanic, American Indian, Caucasian/Oriental, Black
R3	Hispanic, Oriental, Caucasian/ Black, American Indian
R4	Caucasian/Black, Hispanic, Oriental, American Indian
R5	Black/Hispanic, Oriental, American Indian, Caucasian

TABLE XXXIV (cont.)

Independent Variables Used in Discriminant Analysis of Problem Drinkers

Pay Scale(Q2)

Variable	Split
P1	GS,NA,AS/WG,WL,WS,UA
P2	GS/WG,WL,WS,UA,NA,AS
P3	GS,UA,NA/WG,WL,WS,AS

Marital Status(Q10)

Variable	Split
M1	Widower, married/Never been married, divorced, legally separated
M2	Divorced/Married, never been married, legally separated, widower
M3	Never been married, legally separated/Divorced, married, widower
M4	Never been married, divorced/ Married, legally separated, widower

Interaction Terms

Term	Composition
I1	(PSYDEP)x(JOB SAT)
I2	(AGE)x(WKINVOLV)

TABLE XXXV

Independent Variables Used in Regression Analysis of VT

Psychological Dependence on Alcohol(PSYDEP)
Job Satisfaction(JOB SAT)
Work Involvement(WKINVOLV)
Stress
Organizational Trust(TRUST)
Program Worth(WORTH)
Age(Q5)
Sex(Q6)
Parental Heavy Drinkers(PARENT)
Single Parent Families(ONE PAR)
Geographic Region(REGION)
Number of Dependents(DEP)(Q11)
Educational Level(EDUC)(Q9)
Total Active Federal Service(TAFS)(Q12)
Supervisory Status(Q101)

Dummy Variables

Race(Q8)

Variable	Split
R1	Oriental, Caucasian/Black, Hispanic, American Indian
R2	Black, American Indian/Hispanic, Oriental, Caucasian
R3	American Indian/Black, Hispanic, Oriental, Caucasian

Pay Scale(Q2)

Variable	Split
P1	GS/WL,WG,WS,UA,NA,AS
P2	GS,UA/WL,WG,WS,NA,AS
P3	GS,WS/WG,WL,UA,NA,AS

TABLE XXXV (cont.)

Independent Variables Used in Regression Analysis of VT

Marital Status(Q10)

Variable	Split
M1	Married, widower/Never been married, legally separated, divorced
M2	Married, never been married/ Divorced, legally separated, widower
M3	Never been married, divorced/ Married, legally separated, widower
M4	Married/Never been married, divorced, legally separated, widower

Interaction Terms

Term	Composition
I1	(PSYDEP)x(STRESS)
I2	(JOB SAT)x(STRESS)
I3	(STRESS)x(WKINVOLV)

Vita

Richard D. Larkins was born on 8 October, 1946 in Norfolk, Virginia. He attended Moury High School in Norfolk and the United States Air Force Academy, graduating with a B.S. degree in Basic Sciences in 1969.

Richard has had three tours as a security police officer which span his ten years in the service. The first was at Scott AFB, Illinois. The second was at Bien Hoa AB, Vietnam, and the last was at Hickam AFB, Hawaii where he also was a member of the Pacific Air Forces(PACAF) Inspector General team. Upon completing his tour at Hickam, he entered the Air Force Institute of Technology.

Richard is married to the former Leadell Faye Stenika who is also a commissioned officer in the Air Force. They have one daughter, Christine René.

Permanent Address: 5940 Oetjen Blvd.
Norfolk, Virginia 23502